BIOTECH

Instructions For Use

USD 3416

Allegro™ Connect Buffer Management System

Step by Step Guide

Contents

1 Introduction

1.1 Purpose

The following instructions for use (IFU) document contains all essential information for the user to make use of the Allegro Connect buffer management system. This IFU includes a description of the system functions and capabilities, contingencies and method of operation.

1.2 Points of Contact

For technical support, please contact:

- Your local Pall representative
- Visit www.pall.com

Or contact Pall regional headquarters:

Corporate Headquarters

25 Harbor Park Drive
Port Washington,
NY 11050, USA

Phone (USA toll free):
+1.800.717.7255
Phone: +1.516.484.5400

E-mail:
biopharm@pall.com

European Headquarters

Avenue de Tivoli 3,
1700 Fribourg, Switzerland

Phone: +41 (0)26 350 53 00

E-mail:
LifeSciences.EU@pall.com

Asia-Pacific Headquarters

1 Science Park Road, #05-09/15 East Wing, The Capricorn, Singapore Science Park II, Singapore, 117528.

Phone: +65 6389 6500

E-mail:
sgcustomerservice@pall.com

1.3 Glossary

Table 1

Abbreviations and key phrases

Abbreviation / Term	Definition
IFU	Instructions For Use
GHS	Globally Harmonized System (of classification and labelling of chemicals)
BMS	Buffer Management System
CPC	Colder Products Company
UCI	User Control Interface
HMI	Human Machine Interface
SUS	Single Use System
SCADA	Supervisory Control and Data Acquisition
DCS	Distributed Control System
IP	Ingress Protection
PID	Proportional-Integral-Derivative
PLC	Programmable Logic Controller
pH	Potential of Hydrogen
CE	European Conformity
NRTL	Nationally Recognized Testing Laboratory
CB scheme	Certification Bodies scheme
WEEE	Waste Electrical and Electronic Equipment
ISO	International Organization for Standardization
WFI	Water For Injection
USB	Universal Serial Bus

2 System Description

The Allegro Connect buffer management system provides users with an efficient and optimized design for buffer management.

Buffer management includes all fluid management aspects of buffer within a bioprocessing suite, from buffer preparation to buffer storage prior to use. The Allegro Connect buffer management system is to be used, primarily, within the bioprocessing suite in combination with a unit operation and remain in position until the unit operation is complete. The buffer management system can be maneuvered around the bioprocessing suite/s and be oriented to suit any unit operation's layout. The buffer management system facilitates just-in time preparation of buffers to meet the demands of various unit operations within a manufacturing process.

The Allegro Connect buffer management system comprises of four key components:

- Buffer management skid
- Buffer stock solution / process solution workstations
- Filter trolley (optional)
- WFI tote (optional)

The buffer management components above are designed to work in unison. These key components provide end-users easy-to-use, high efficiency buffer dilution capabilities for multiple applications. Automation standards provide seamless integration into existing DCS and SCADA platforms.

3 Symbols, Safety Notes, Conventions, Warnings

3.1 Disclaimer

- This IFU and the products described within are subject to change.
- All equipment must be operated as instructed in this IFU.
- Please read the entire IFU before attempting to use this equipment. If operational guidelines are not followed, equipment damage and personal injury could occur.
- Do not use this equipment in a hazardous atmosphere or with hazardous materials / chemicals for which the equipment was not designed.
- The manufacturer is not responsible for any damage to this equipment that may result from the use of an accessory that it did not manufacture and specify for this purpose.

3.2 Safety Notes

All safety symbols; caution, prohibition, mandatory and GHS will be explained before use in the remainder of this document. The appropriate symbol will then be present when required. We comply to ISO7010 for Safety Signs and Symbols. Information regarding the types of symbol used in this IFU is identified below in Table 2.

Table 2

Types of safety signs

Colour	Meaning / Purpose	Example	Description	Instruction and Information
Red	Prohibition / Danger		Red ring and diagonal bar with black symbol on white background	Specifies behaviour that is prohibited because it would result in an immediate or potential risk of personal injury or threat to health / life.
Yellow	Warning / Caution		Yellow triangle with black border and black symbol	Warns of hazards which could result in personal injury or threat to health.
Blue	Mandatory / Information		Blue circle with white symbol	Specifies an action required or informs of information to safeguard personal health and / or avoid risk of personal injury.
Red	GHS Hazards		Red diamond, white background with a black symbol	Classifies the hazards of chemical products and communicates health and safety information.

3.3 Information, Hazards and Prohibitions

In the below table, you can find an overview of safety information related to the Allegro Connect buffer management system.

Table 3

Allegro Connect buffer management system safety information

Symbol	Purpose	Description
	Prohibition	Do not: - Use the system with materials for which the equipment was not designed. - Push or pull on the HMI to move the skid. - Allow the tubing / manifold to kink. - Pull the cables or tubes when the manifold is filled. - Block the air filter and cooling fan outlets - Use sharp blades. - Move workstations when attached to the manifold or skid. - Move the hardware when in operation. - Modify the valve blocks. - Start the system if the valve blocks are not secured. - Open valve blocks if the system is switched on and not in installation mode. - Use filters more than once. - Transport the hardware without its dedicated shipping crate. - Fill above the nominal volume of the biocontainers on the stock solution or process solution workstations. - Start the feed pump for the stock solution workstation when the biocontainers are empty. - Use more than 1 bar (14.5 psi) of pressure when using an external compressed air line to drain the manifold through the air filter. - Exceed 10 bar (145 psi) when using external compressed air for pneumatic control of parts on the Allegro Connect buffer management system. - Use the Allegro Connect buffer management system for sodium hydroxide dilution

	Caution	Caution: - Ensure manifolds are secured prior to starting the system. - Be aware of the HMI screen position when performing actions on the lower part of the system. - Care must be taken when moving the stock solution or process solution workstations when the biocontainers are full of liquid. - Risk of over filling or under filling if biocontainers are not fitted correctly to the stock solution and process solution workstations. - Wet air filters will block air flow. - Care should be taken when disconnecting feed tubes from the biocontainers to the systems to allow for buffer biocontainer switching.
	Caution	Caution: - Use the mains supply cable supplied with the system. - Position the skid close to the main power supply. - Switch off electrical supply and disconnect from the mains prior to any cleaning or maintenance operation.
	Caution	Caution: - Tripping hazard. Beware cables between parts of the system.
	Caution	Caution: - Keep hands clear of pinch point areas. - Pinching risk when fitting the pump heads on to the system, when fitting manifolds, clamps and securing valve blocks.
	Caution	Caution: - Maximum measured noise level can exceed 70 dB(A) with a maximum measured peak value of 74.6 dB(A) during flushing operation of the Allegro Connect buffer management system.
	Caution	Caution: - Prolonged exposure of the Allegro Connect buffer management system workstations and filter trolley to concentrated salt solution can lead to corrosion. - Prolonged exposure of liquids containing chlorine can cause discoloration.
	Caution	Caution: - Heavy machinery is a tipping risk.
	Prohibition and Caution	Prohibition and Caution: - Do not spray liquid or allow ingress of fluid into the fan on the electrical cabinet.

	Caution and Mandatory	Caution and Mandatory: - This class 1 product must be connected to a mains power socket with a protective ground connection.
	Caution and Mandatory	Caution and Mandatory: - The electrical cabinets may only be opened by qualified personnel and service maintenance.
	Caution and Mandatory	Caution and Mandatory: - Outside of the crate hardware should only be lifted from the side using the specified lifting points. - Ensure the forks pass all the way under the box section of the hardware.
	Mandatory	Mandatory: - Always store and lift the boxed system in an upright position - Position the workstations / filter trolley close enough to be connected to the main skid. - Prior to fitting manifolds, ensure valve blocks are open and stationary and the valves are off. - Ensure valves to the workstation biocontainers are closed when draining the system through use of air, via the air filter. - Ensure liquid is drained from the manifold prior to removing any pH or conductivity probes. - During installation of manifolds, ensure installation mode is active. - Before use ensure pump head retention plates are installed correctly to maintain SUS integrity and pump functionality. - All valves should be open when using air to drain the manifold. - Place the system on a level floor and lock all castors. - Maintenance of the system may only be performed by qualified personnel. - A minimum of 1 meter is required at the rear end of the operational sides of the hardware. - Only a container provided by Pall should be used on the stock and process solution workstations. - If the air filter becomes wet it is required to be changed. - Hydrophobic air filters must be used. - All filters are single-use. - Use upper clips for workstations nearest to the main skid (inner workstation). - Use lower tube clips for the workstations furthest away (outer workstations)
	Mandatory	Mandatory: - Equipment should be used in accordance with the user manual and instructions for use.

	Information	Information: - Upon actuation of the emergency stop button all control loops revert to their safe state and are blocked from further switching operations. Any on-going control functions are halted immediately. To unlock the actuators, the emergency stop button must be pulled back, the hardware reset button pressed and the alarms on the Allegro Connect buffer management system HMI must be acknowledged. The control systems can then be restarted by the user. - Performance may be limited when not using standard Pall products such as hydrophobic filters. - Stock buffer solutions reduce in volume, there may be a requirement to switch out stock buffer workstations. - Stock buffer workstations located to the left of main skid. - Process buffer workstations located to the right-hand side with the inner workstations closest to the skid. - Some single-use items will be gamma-irradiated for sterilizing purposes.

3.4 Symbols

Table 4

Other symbols

Directive / Standard	Symbol
WEEE: Waste Electrical and Electronic Equipment recycling (2012/19/EU)	
CE Certified	CE
IECEE (CB Scheme)	CB

4 Receiving Equipment

The Allegro Connect buffer management equipment and consumables arrive in separate crates or boxes. This section will describe for each component, the content of each crate, unpacking steps and initial setup.

4.1 Hardware

4.1.1 Allegro Connect Buffer Management System

The Allegro Connect buffer management equipment are shipped in reusable wooden crates with the dimensions and weights as per the table below.

Table 5

Approximate weights and dimensions of the Allegro Connect buffer management system

System Part	Buffer Management Skid	Workstation	Filter Trolley
Mass (kg)	751	171	90
Dimensions (W x D x H (cm))	112 x 112 x 199	100 x 130 x 200	40 x 120 x 130

The Allegro Connect buffer management skid, workstation and filter trolley will be shipped in wooden crates. The total weight of the crated parts will not exceed 931 kg per crate.

Inspect the crate as shown in Figure 1 to ensure it has not been damaged. All crates are designed so they can easily be moved to the desired location with a forklift or pallet truck. All removable sides of the crates are held together with clamps.

Figure 1

Depiction of the crate.

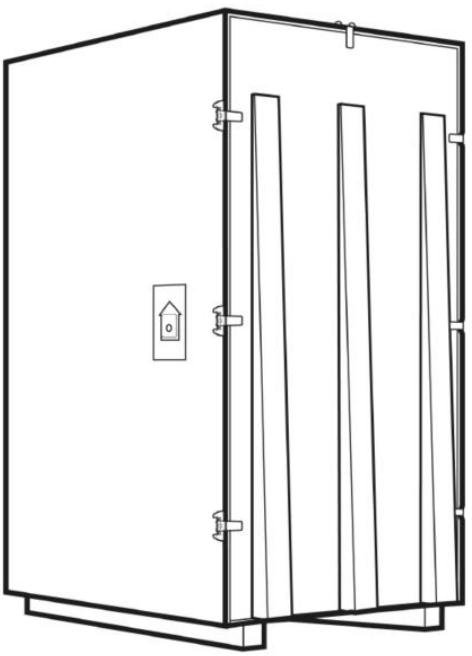

4.1.2 Uncrating of the Allegro Connect Buffer Management Skid

To uncrate the skid, follow the next steps:

Step 1. — **Check TiltWatch® label**

- If arrow is red, content needs inspection as tipping has occurred
- If arrow is black, proceed with unloading

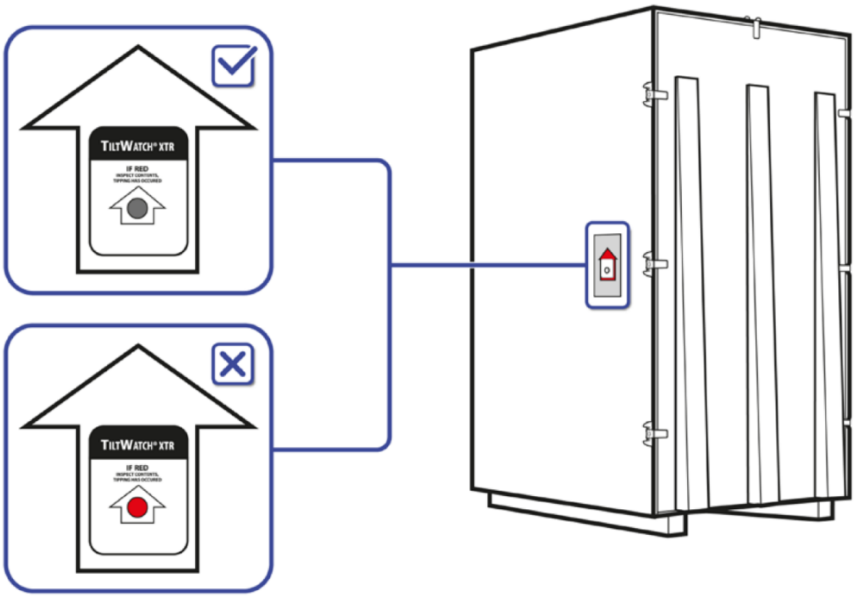

Step 2. — **Open turn keys**

- Lift tab up
- Twist tab anti-clockwise
- Pull tab and release hinge

7 turn keys to open in total

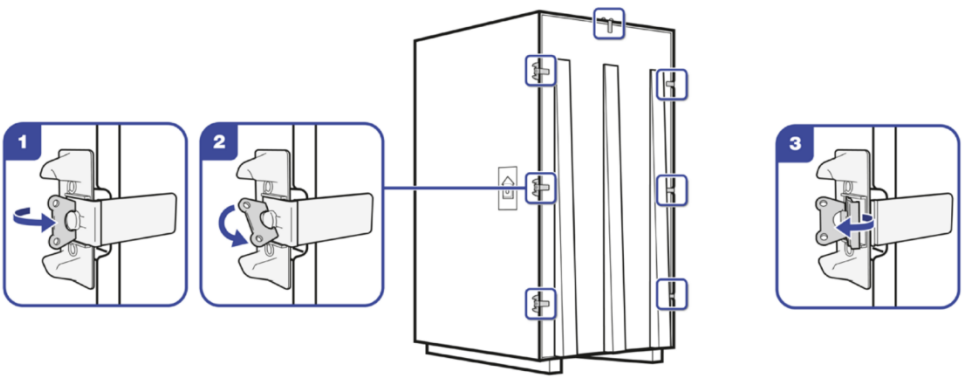

Step 3.

Open front panel

- Support front panel down to the ground

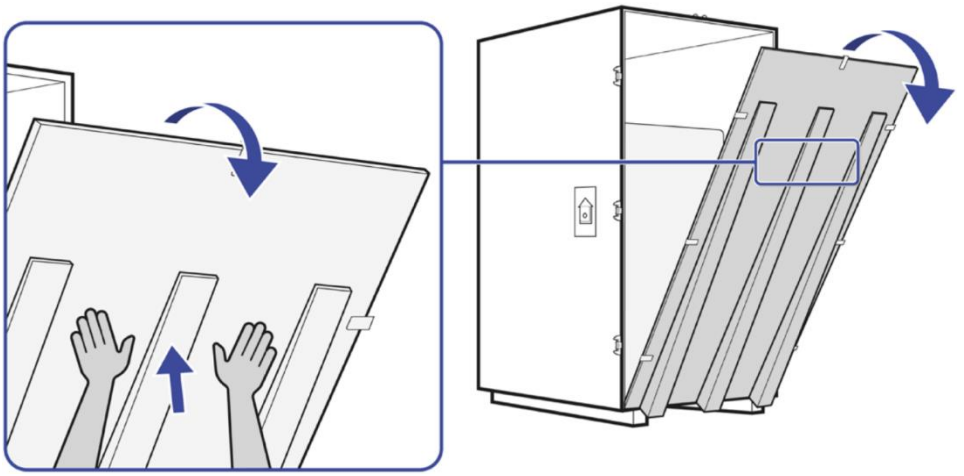

Step 4.

Remove crossbeam

- Remove crossbeam to allow unloading of skid

Use a screwdriver to remove screws holding crossbeam in place

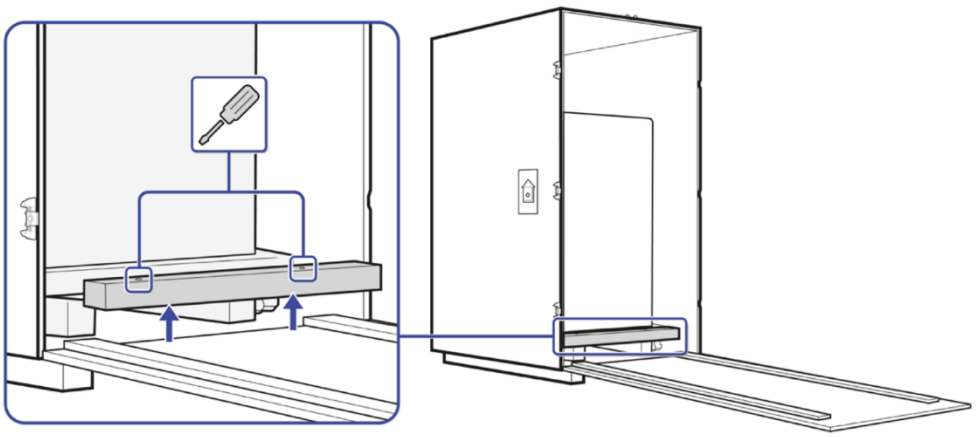

Step 5.

Remove foil

- Remove the protective foil envelope from the skid

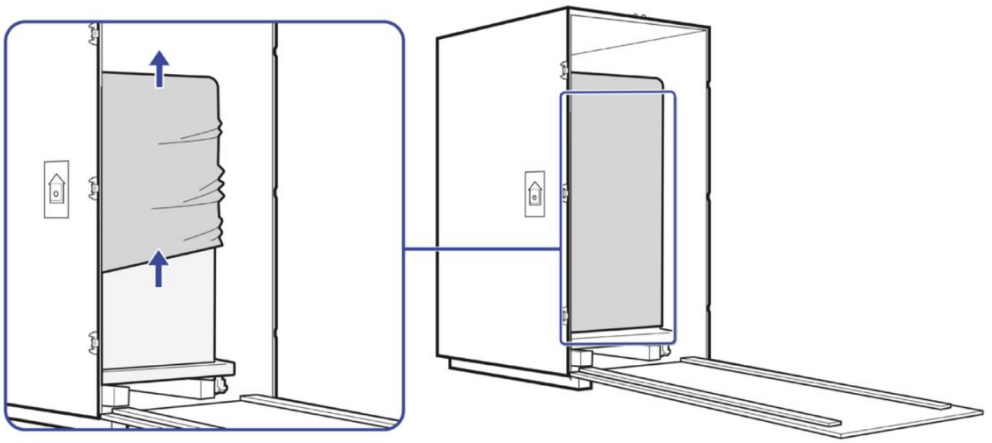

Step 6.

Unload content

- Use front panel as ramp to unload using a pallet truck

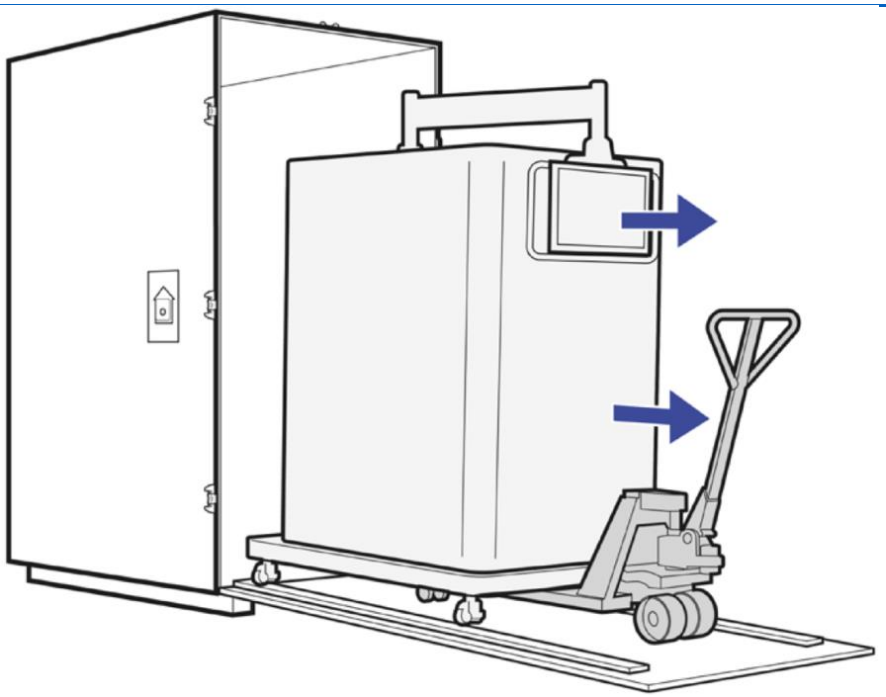

4.1.3 Uncrating of the Allegro Connect Buffer Management Workstations and Filter Trolley

The workstations and filter trolleys will arrive in crates. The unpacking process will follow similar steps shown in the previous section.

4.1.4 Crate Contents

Table 6

Contents of the Allegro Connect buffer management system crate

System	Buffer Management Skid	Workstation	Filter Trolley
Parts Contained	Will be delivered with flying lead power cable, with correct plug installed depending on customer requirements pH probe cables Hamilton Arc head Conductivity probe cables Conductivity probe calibration well	Power cables Communication cables Level sensor cables	Connectivity cables

4.2 Setting up Hardware

4.2.1 Required Utilities

- The power cable for the Allegro Connect buffer management system will come as a flying lead, which is available to be changed to the required plug requested by the customer.
- The instrument must be connected to the protective earthing via the mains power outlet socket.
- The pressure of the compressed air must be minimum 6 bar (87psi).
- Only clean, dry and oil free compressed air must be used.
- Water feed line should deliver WFI grade water for use as a buffer diluent.

The Allegro Connect buffer management system is provided with the following power cables:

Table 7

Power cables (recommended options)

European Power Cable	US Power Cable
230/240 VAC; IEC 60309; IP54; 16 A	NEMA 6-15P, 15 A

4.2.2 Required Information

1. This equipment has been designed for indoor use only and a maximum ambient environmental temperature of 5 - 30 °C.

2. Allow for access to the machine's power inlet socket.

3. A minimum clearance of 1 meter (3.3 ft) is required at the rear and on the operational sides of the hardware.

4. For set-up of the skid with the workstations, ensure enough clearance in the room is provided to allow for at least:

- 50 cm (20 in.) between the buffer management skid and the stock/process workstations
- 80 cm (32 in.) between the buffer management skid and the filter trolley
- 80 cm (32 in.) between the filter trolley and the process buffer workstation
- 20 cm (8 in.) between the workstations

5. All equipment will fit through a standard double door of 2.44 m (8 ft.) height by 1.83 m (6 ft.) width. Operational height limitation for the equipment is between 0.45 m and 2.13 m (1.5 ft and 7 ft.) respectively.

6. Provide additional space above to access the top of the workstations and buffer management skid.

4.2.3 Hardware Initial Preparation

Ensure the buffer management skid is level with each individual castor height adjusted accordingly. The workstations and filter trolley should be on a level floor with all swivel wheels locked to prevent uncontrolled movements of the units. System spacing recommendations are detailed in Section 4.2.2 and shown below in Figure 2.

Figure 2

System layout

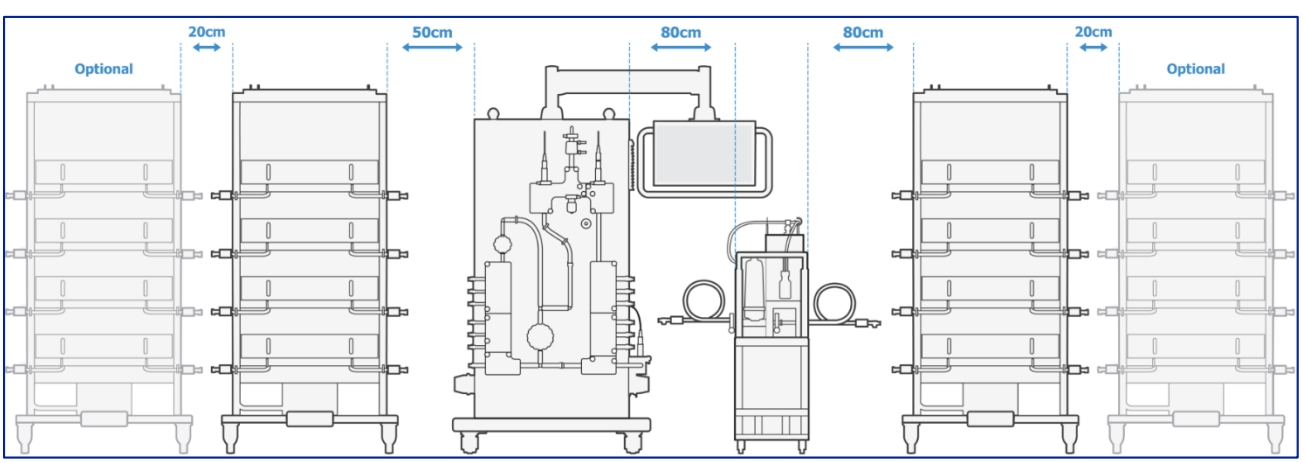

4.3 Single-Use Systems

4.3.1 Labels

The following are examples of the label designs used for Pall Medemblik, The Netherlands manufacturing site.

Figure 3

Box label examples for Pall Medemblik manufacturing plant

Each label shows a scan-friendly 2D matrix based on Global GS1 standards containing all the essential information for the end user. The label design makes use of ISO 15223 symbols where appropriate, in-line with EnLabel and CQP0003 requirements. Each label has a bar code containing the following:

- Order / batch number
- Part number
- Manufacturing date
- Expiry date
- Quantity of product

A label is also applied to the outer final product box container on one end, and labels are also applied to the primary packaging bags within the container.

4.3.2 Gamma Irradiation Dots

If applicable, for irradiated products, an irradiation indication dot is placed on the inner primary packaging bag label and on the final product carton label. The dot design is as shown below:

Figure 4

Gamma irradiation dot (A: Un-irradiated, B: Irradiated)

This dot and its shade of red is not an indication of dose level
The dot will change to red once irradiated, indicating the irradiation process has been performed at the correct dosage (minimum of 25 kGy). Please refer to the irradiation certificate supplied with each batch for information of the dose range applied.

5 Product Overview

The Allegro Connect buffer management system comes as two different set-ups. One as a basic system, without controller capabilities that links to other Allegro Connect systems which control the buffer management system. The other comes with an integrated, stand-alone control system. The left workstation contains the stock buffer solutions and the right workstation contains the diluted process buffer solutions which feed into the next unit operation.

Figure 5

Allegro Connect buffer management system (A: Stock solution workstation; B: Buffer management skid; C: Process solution workstation)

5.1 Hardware

5.1.1 Buffer Management Skid

Figure 6

Overview of buffer management skid

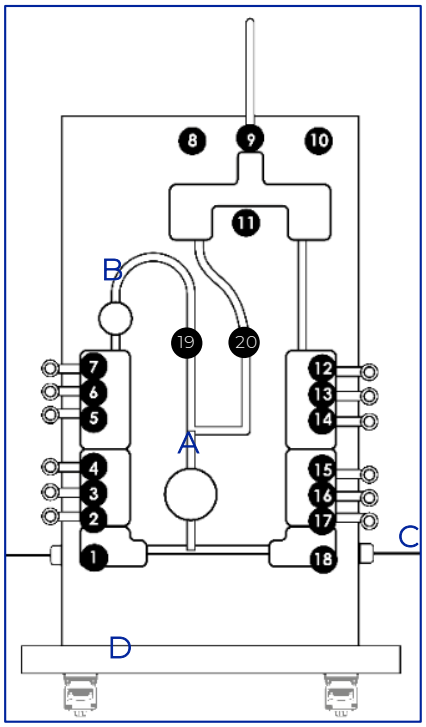

Table 8

Skid connections and key components

Item	Description	Item	Description
1	WFI inlet port	13	Process buffer 2 outlet port
2	Stock buffer 6 inlet port	14	Process buffer 3 outlet port
3	Stock buffer 5 inlet port	15	Process buffer 4 outlet port
4	Stock buffer 4 inlet port	16	Process buffer 5 outlet port
5	Stock buffer 3 inlet port	17	Process buffer 6 outlet port
6	Stock buffer 2 inlet port	18	Process buffer 7 outlet port
7	Stock buffer 1 inlet port	19	Flow sensor (optional)
8	Conductivity probe / holder	20	Flow sensor (optional)
9	Air filter	A	QF1200 pump / WFI pump
10	pH probe / holder	B	QF150 pump / stock buffer pump
11	Pressure sensor	C	Connectivity cable to workstation
12	Process buffer 1 outlet port	D	Castor wheels

5.1.2 Workstation

Figure 7
Overview of workstation

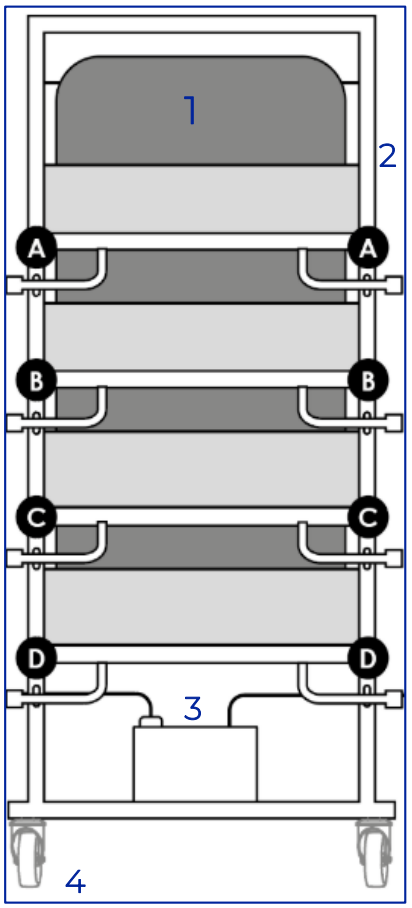

Table 9
Workstation connections and key components

Item	Description	Item	Description
A	Stock buffer 1 outlet / Process buffer 1 inlet	1	100 L biocontainer
B	Stock buffer 2 outlet / Process buffer 2 inlet	2	Level sensor (fitted under tray)
C	Stock buffer 3 outlet / Process buffer 3 inlet	3	Workstation connection to skid
D	Stock buffer 4 outlet / Process buffer 4 inlet	4	Castor wheels

5.1.3 Filter Trolley

Figure 8

Overview of filter trolley

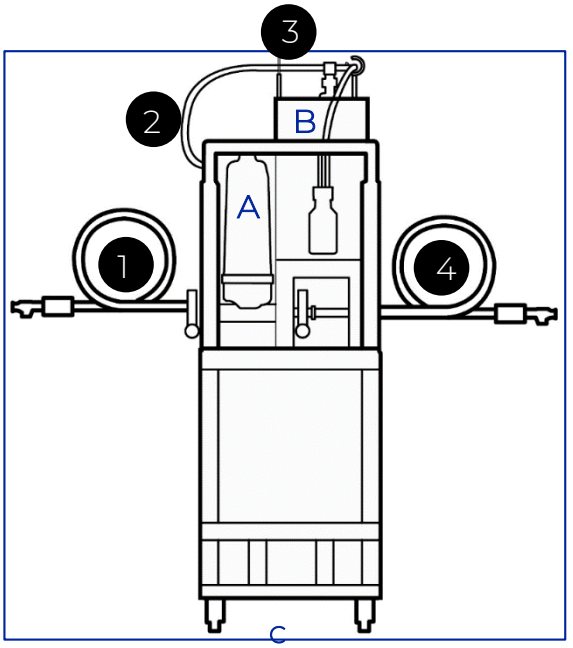

Table 10

Filter trolley connections and key components

Item	Description	Item	Description
1	Process buffer inlet	A	Filter
2	Level sensor (aligned with top of each filter)	B	Push bar
3	Filter bleed manifold	C	Castor wheels
4	Filtered process buffer outlet		

5.1.4 Ports and Connections on the Allegro Connect Buffer Management Skid

Figure 9

Overview of ports and connections on the Allegro Connect buffer management skid

Table 11

Port and connection labels

Item	Label Name	Description
1	EMERGENCY STOP	Emergency stop button
2	MANIFOLD INSTALLATION SWITCH	On / Off switch to engage valve actuations
3	RESET BUTTON	To reset system
4	PRESSURE SENSOR	Connection of pressure sensor to skid
5	FLOW SENSOR (optional)	Connection of flow sensors for skid
6	CONDUCTIVITY PROBE 1	Port to connect conductivity sensor
7	CONDUCTIVITY PROBE 2	Port to connect conductivity sensor
8	pH PROBE	Port to connect pH sensor
9	ETHERNET 1	Connection to Thin Client
10	ETHERNET 2	Connection to SWITCH (PC, PLC, HMI)
11	ETHERNET 3	Connection for slave machine
12	SURGE WORKSTATION	Port to connect the skid to the process buffer workstation
13	FILTER ASSEMBLY	Port to connect the skid to the filter assembly
14	WFI TOTE	Port to connect the skid to the WFI tote
15	CONCENTRATE WORKSTATION	Port to connect the skid to the stock buffer workstation
16	POWER IN	Port to connect main power cable
17	AIR IN	Port to connect air supply in
18	PUMP 1	Quattroflow Pump 1 (QF150, stock buffer pump)
19	PUMP 2	Quattroflow Pump 2 (QF1200, WFI pump)
20	POWER	Switch on buffer management system

5.2 Single-Use System

Table 12

Single-use components

Part Number	Description
6431-1417W	Allegro Connect buffer management ½ in. 100 L biocontainer
6431-1457D	Allegro Connect buffer management ½ in. 100 L biocontainer with Kleenpak® Presto sterile connectors
6431-1417Z	Allegro Connect buffer management ½ in. filter set
6431-1418A	Allegro Connect buffer management ½ in. filter set with Kleenpak Presto sterile connectors, 1 m tubing
6431-1418B	Allegro Connect buffer management ½ in. filter set with Kleenpak Presto sterile connectors, 1.5 m tubing
6431-1418C	Allegro Connect buffer management ½ in. filter set with Kleenpak Presto sterile connectors, 2 m tubing
6431-1418E	Allegro Connect buffer management ½ in. transfer line, 0.7 m tubing
6431-1418F	Allegro Connect buffer management ½ in. transfer line, 1.6 m tubing
6431-1418G	Allegro Connect buffer management ½ in. inlet tube kit 1 m
6431-1418H	Allegro Connect buffer management ½ in. inlet tube kit 1.5 m
6431-1418J	Allegro Connect buffer management ½ in. inlet tube kit 2 m
6431-1418K	Allegro Connect buffer management ½ in. outlet tube kit 1 m
6431-1418L	Allegro Connect buffer management ½ in. outlet tube kit 1.5 m
6431-1418M	Allegro Connect buffer management ½ in. outlet tube kit 2 m
6431-1418N	Allegro Connect buffer management ¼ in. filter bleed line
6431-1420S	Allegro Connect buffer management ½ in. feed including flow sensor
6431-1420T	Allegro Connect buffer management ½ in. feed excluding flow sensor
6431-1420U	Allegro Connect buffer management ½ in. outlet
6431-1420V	Allegro Connect buffer management ½ in. drain control

6 Operation

The following section explains the operational steps when using the Allegro Connect buffer management system, with or without the filter trolley and control system.

Step 1.

- Wheel the Allegro Connect buffer management skid in to place, lock castors and ensure the skid is level
- If necessary, make ethernet connections on skid
- Check sensor cables on skid
- Fit air-line into skid
- Plug the Allegro Connect buffer management skid into mains electric point
- Turn on system at mains and turn on Allegro Connect buffer management system switch
- Open air line to system

Recommended air pressure ~ 6 barg

Set-up system

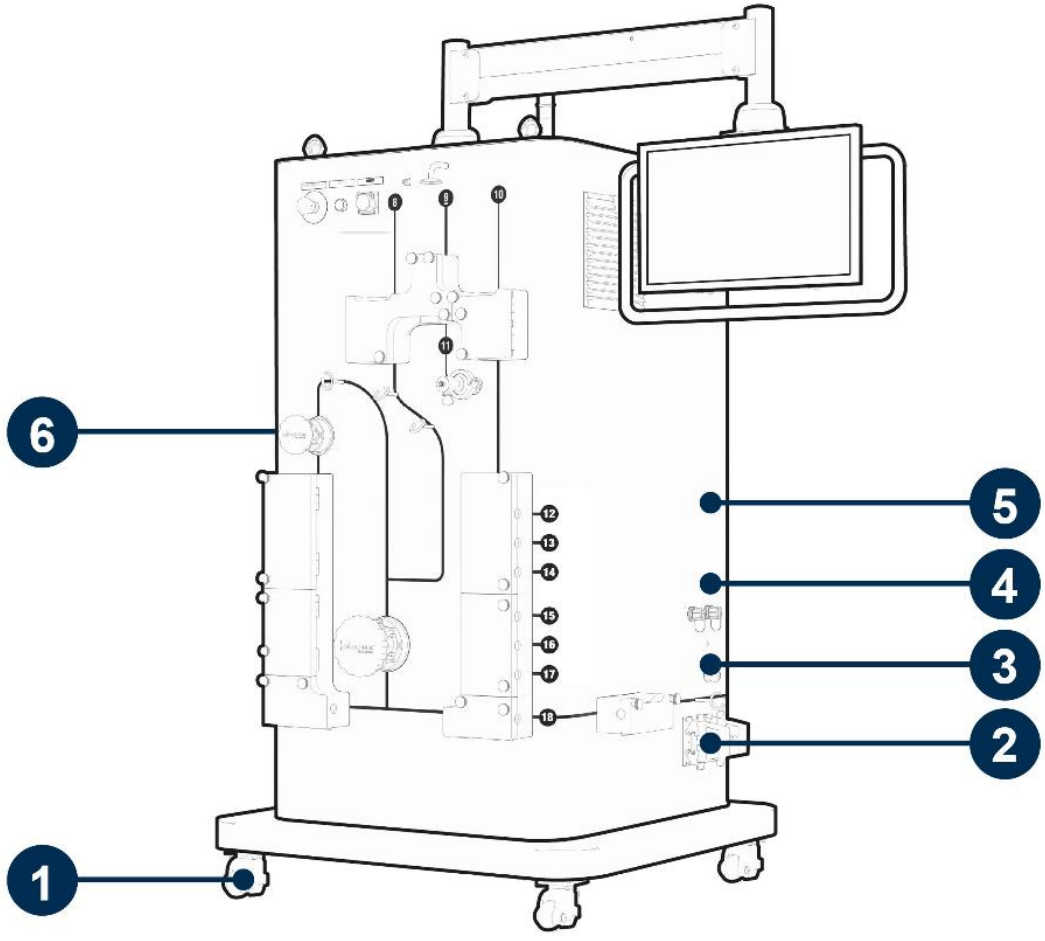

Step 2.

Inspect single-use components

- Collect and inspect SUS boxes for any potential damage
- Open the boxes by using the easy tear tab, pull tab off and open box
- The SU item will be double bagged and should be gamma-irradiated, ensure dot is red before use
- Open the outer packaging containing the SUS outside of the bioprocess suite, and remove the inner packaging in the bioprocess suite before installation
- Inspect the SUS for damage before use

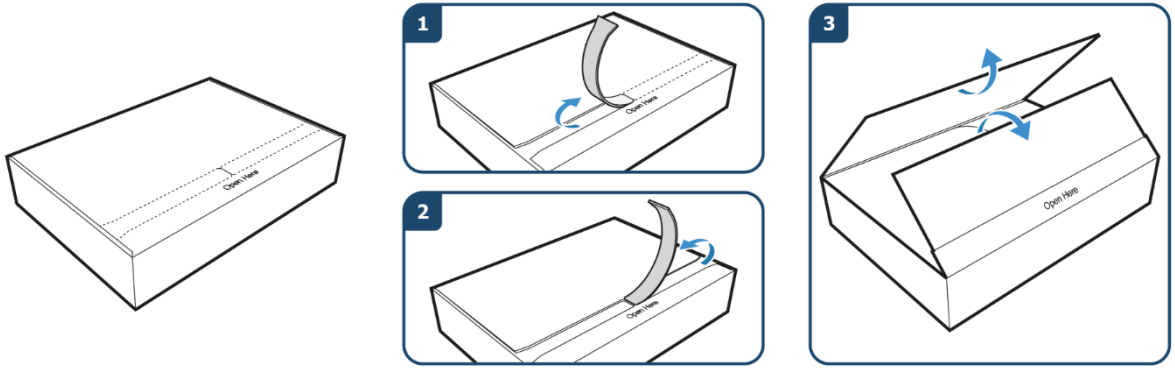

Step 3.

Inlet manifold installation on main skid

- Turn system into installation mode
- Unscrew valve block screws
- Open all valve block doors clockwise - starting from inlet to outlet

For the bottom WFI and drain valve blocks, ensure the blocks are eased downwards so as not to knock into the system

- Collect inlet manifold
- Install smaller pump head (QF150)
- Install larger pump head (QF1200)

Ensure the four fitting pins are aligned with the inserts on the pump head to fit correctly

- Fit manifold tubing into the left-hand inlet manifold valve block

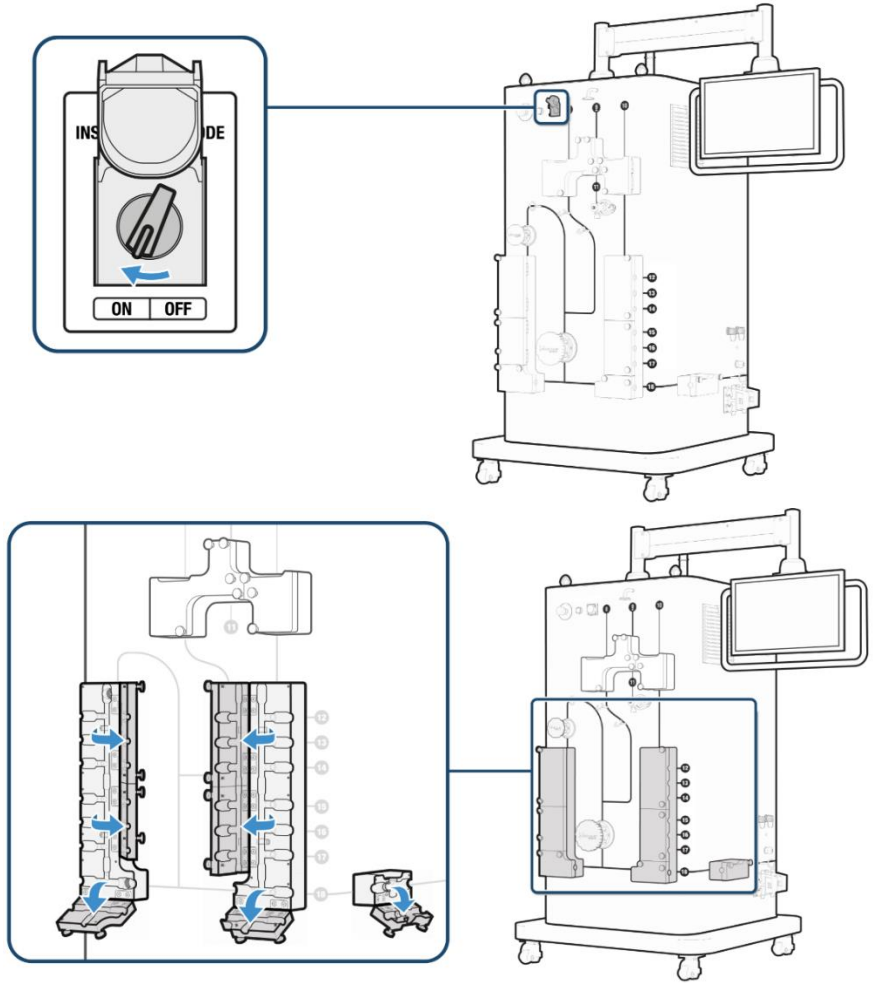

- *Clip the flow meters into the transmitters (optional)*
- Close left hand valve block doors for the inlet manifold
- Tighten valve block screws
- Secure larger pump plate and screw in

Ensure the plate is unscrewed to allow for the initial fitting mechanism to twist and lock into place. Push the plate onto the head at the 4 pins, lock the back/ inner plate by twisting clockwise and then screw the front/ outer plate clockwise until it is fully torqued. At full torque, the plate will 'slip' to stop any further tightening

- Secure smaller pump plate and screw in

Ensure the plate is unscrewed to allow for the initial fitting mechanism to twist and lock into place. Push the plate onto the head at the 4 pins, lock the back plate by twisting clockwise and then screw the front plate clockwise until it is fully torqued. At full torque, the plate will 'slip' to stop any further tightening

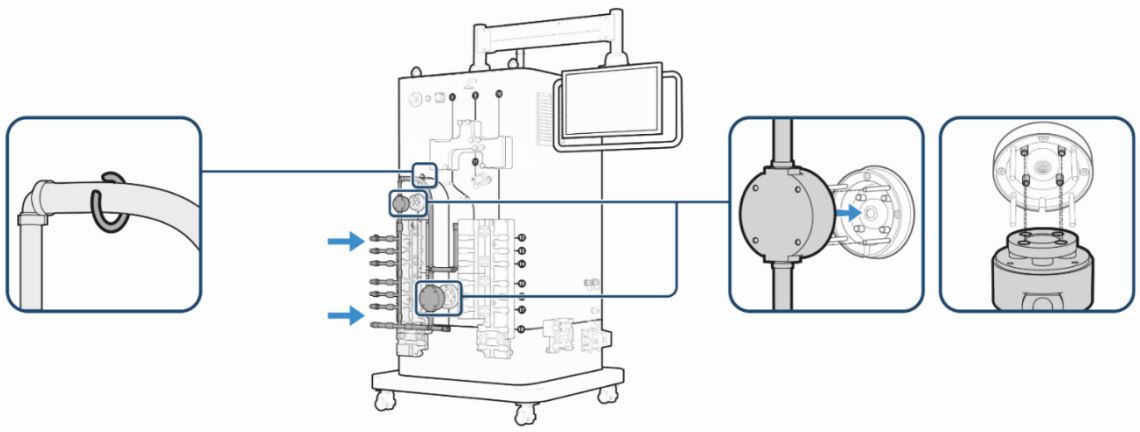

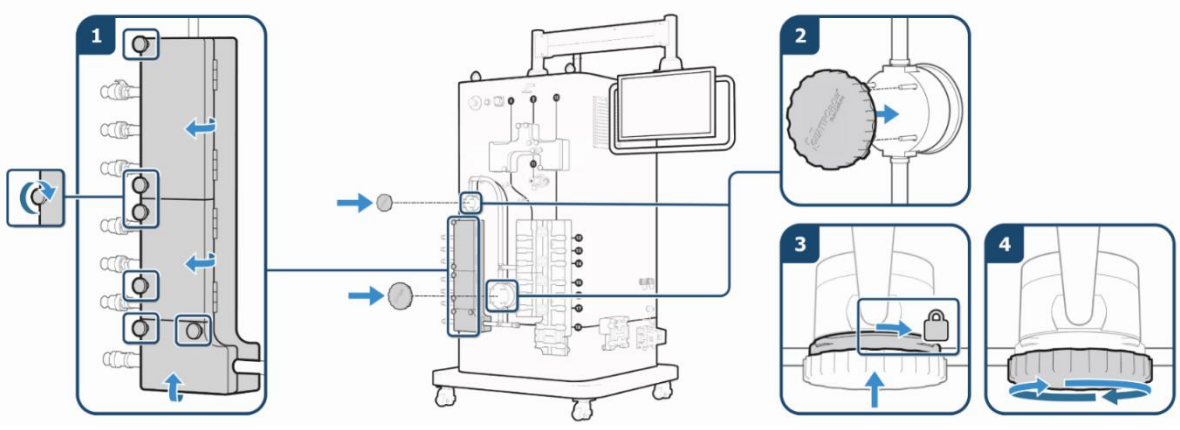

Step 4.

Outlet manifold installation on main skid

- Keep system in installation mode
- Collect the outlet manifold
- Unscrew clamp on the air filter and remove cap, fit the air filter to vent port and clamp
- Unscrew clamp on the pressure diaphragm and remove the cap
- Clip the outlet manifold into the valve blocks and tube clips
- Ensure probe holder joints are fitted securely

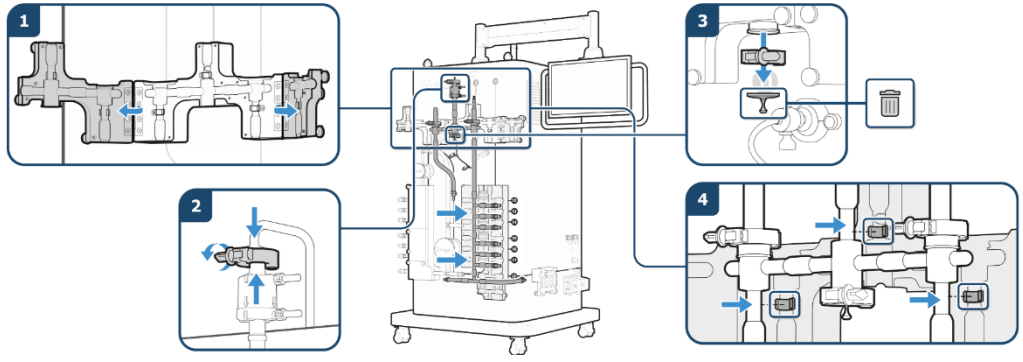

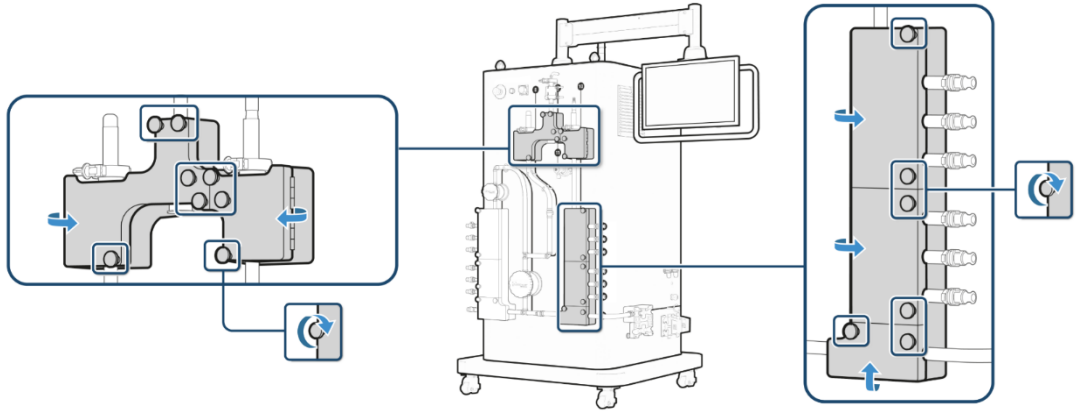

- Close valve block doors for this manifold
- Tighten retaining screws on valve blocks
- Connect the outlet manifold to the Inlet manifold using CPC® connectors at the two connection points
- Install the pressure sensor on to the diaphragm and, clamp in place

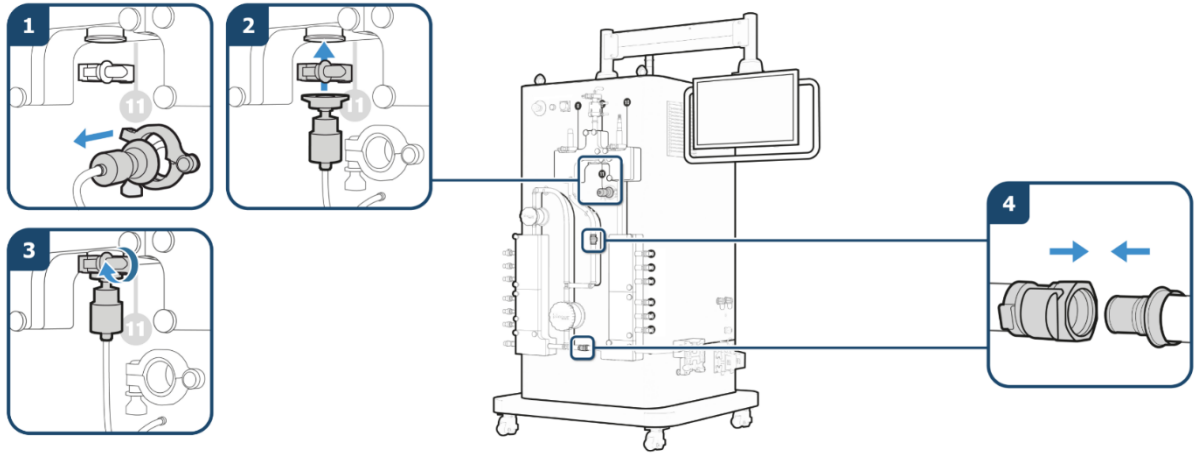

Step 5.

Install drain manifold

- Install drain manifold containing conductivity probe holder
- Ensure manifold is clipped in place
- Close valve block door and tighten retaining screws
- Connect the waste outlet CPC connector from the outlet manifold to the CPC connector on the drain manifold

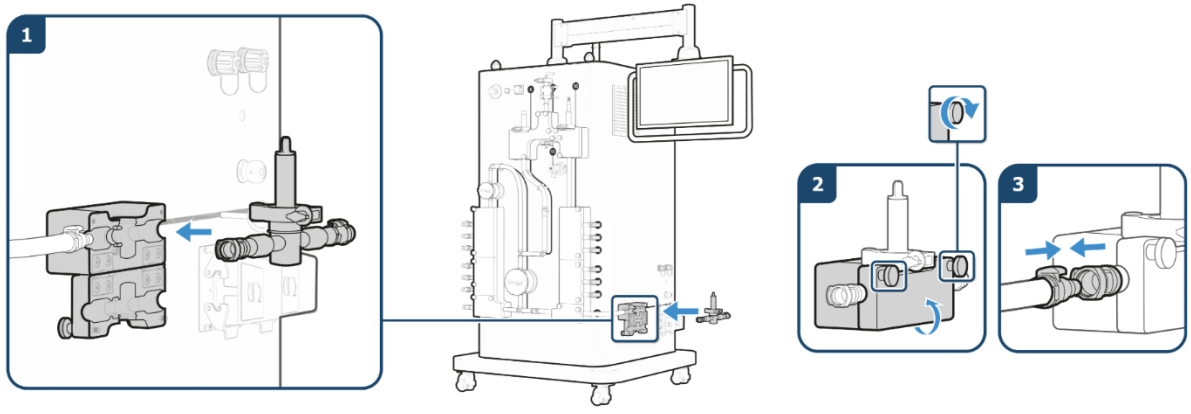

Step 6.

Calibrate conductivity and single-use pH probes

See detailed description in Section 15, Appendix 15.1

Press the exclamation point on the HMI in the top banner to enter values for probes

- Connect conductivity probes to skid
- Connect the SU pH probe to the arc head and screw close
- Fill calibration well with chosen conductivity calibration standard to suit process requirements
- Screw the in-line conductivity probe into the probe holder within the calibration well
- Input probe serial number and calibration fluid conductivity
- Unscrew in-line probe from calibration well probe holder
- Rinse probe with deionized water
- Remove cap from in-line conductivity probe holder on manifold and screw the probe in place, clamp in place

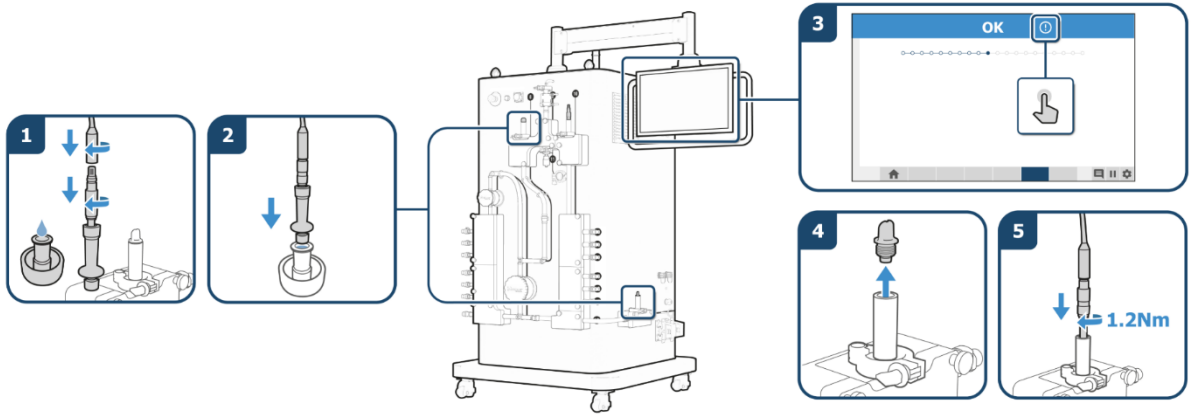

- Input the SU pH calibration values on the HMI for slope (mV/pH) and offset (mV) located on tag of probe
- Fill external probe holder with conductivity standard for drain measurements

For drain measurements, recommend using 84 µS/cm standard

- Screw the drain conductivity probe into the probe holder within the
- calibration well
- Input probe serial number and calibration fluid conductivity
- Unscrew in-line probe from calibration well probe holder
- Rinse probe with deionized water
- Remove cap from the drain conductivity probe holder on manifold and screw the probe in place, clamp in place

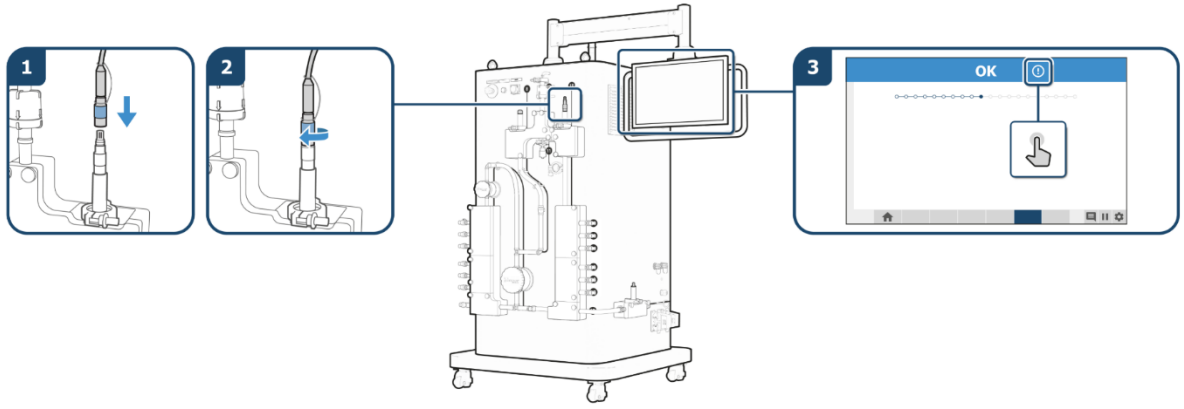

Step 7.

Position workstation in buffer preparation room

- Wheel workstations into clean room and ensure units are locked in place

Step 8.

Install biocontainers on workstations (stock and process)

- Unbox the SU components
- Identify the 100 L SU biocontainers
- Identify the pins at the back of each shelf on the workstation

Ensure the support rod is positioned on the outside of the pins

- Align the holes on the top of the 100 L biocontainer with the pins on the shelf
- Pull inlet and outlet ports of the biocontainers through the base of the shelf

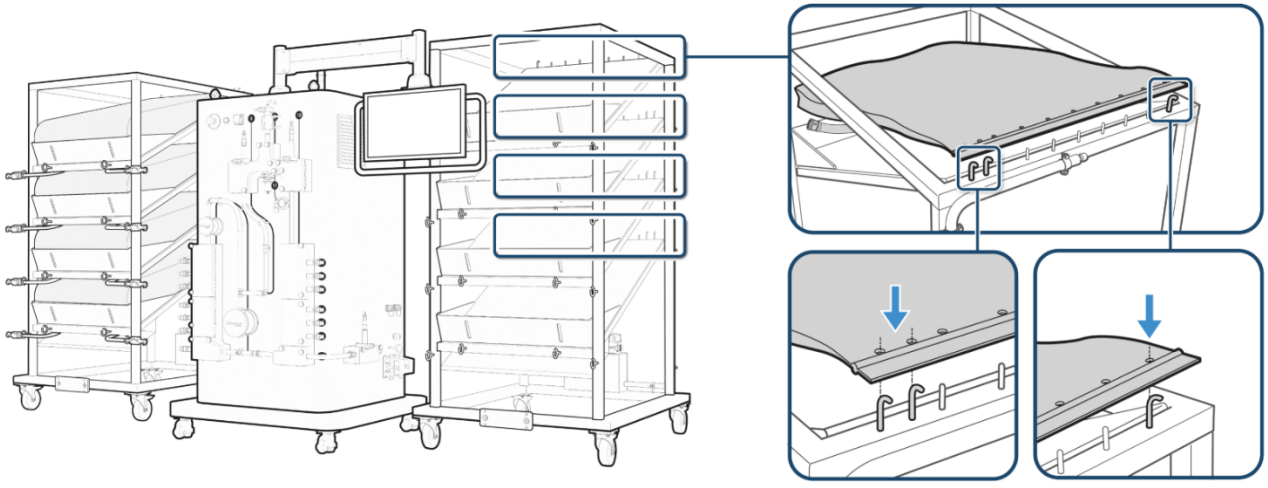

- Clip tubing into place using the retaining clips at the front of the workstation
- Add screw clamps to each inlet and outlet biocontainer tube

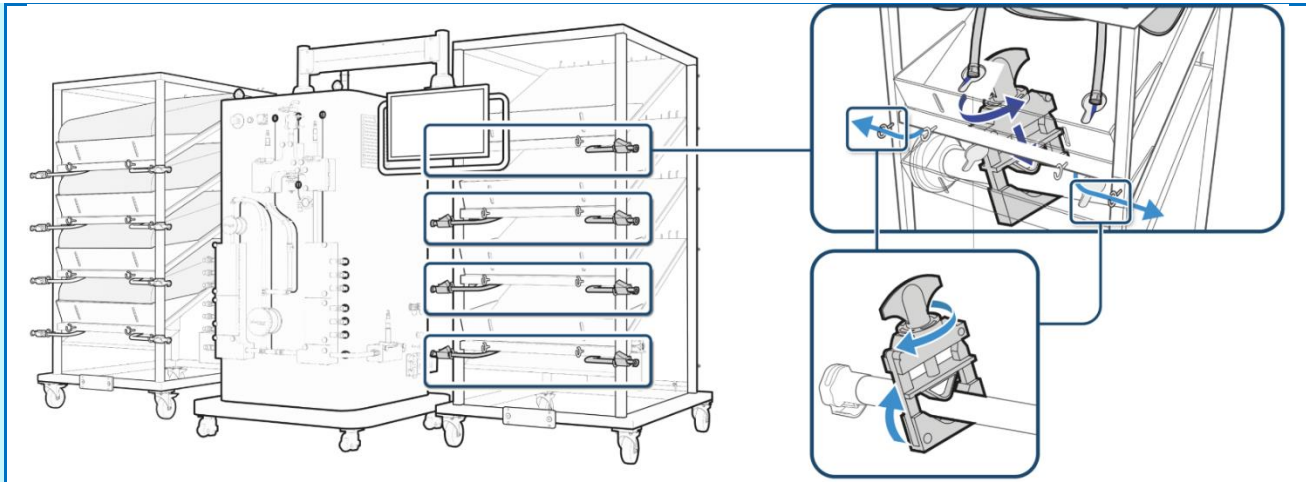

Step 9.

Fill stock buffer biocontainers on workstation

- Connect mixer / biocontainer filled with stock buffer with tubing to the allocated inlet port of the biocontainer on the stock workstation
- Use a pump to fill up the stock buffer biocontainers on the workstation ensuring the liquid volume in each biocontainer does not exceed 100 L

Step 10.

- Wheel the workstations holding the buffer biocontainers into clean room (recommend two operators)
- Place inner workstations approximately 50 cm (20 in.) from the skid (stock workstation on the left and process workstation on the right)
- If more workstations are required, ensure each are 20 cm (8 in.) apart before locking place
- Lock castors in place

Position workstation next to skid

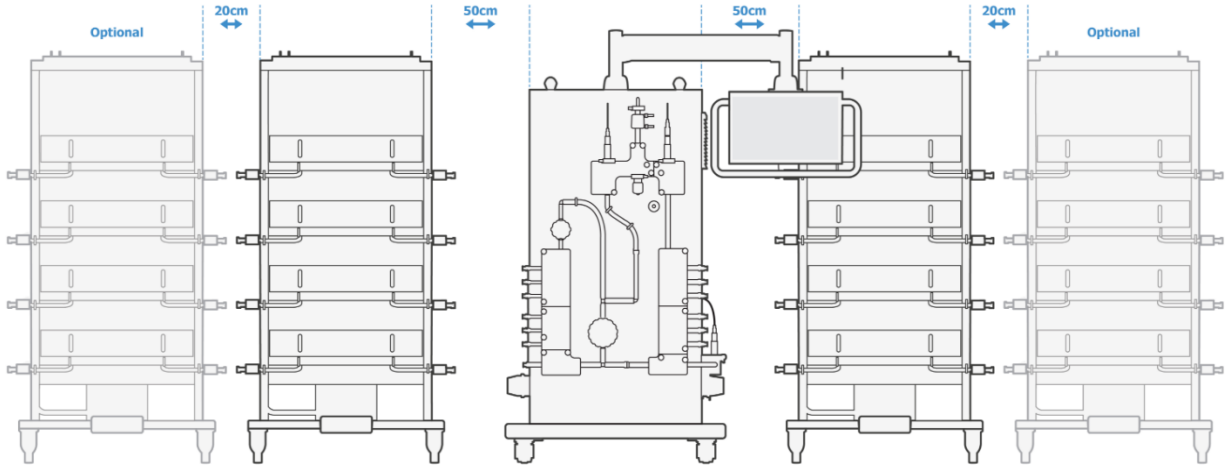

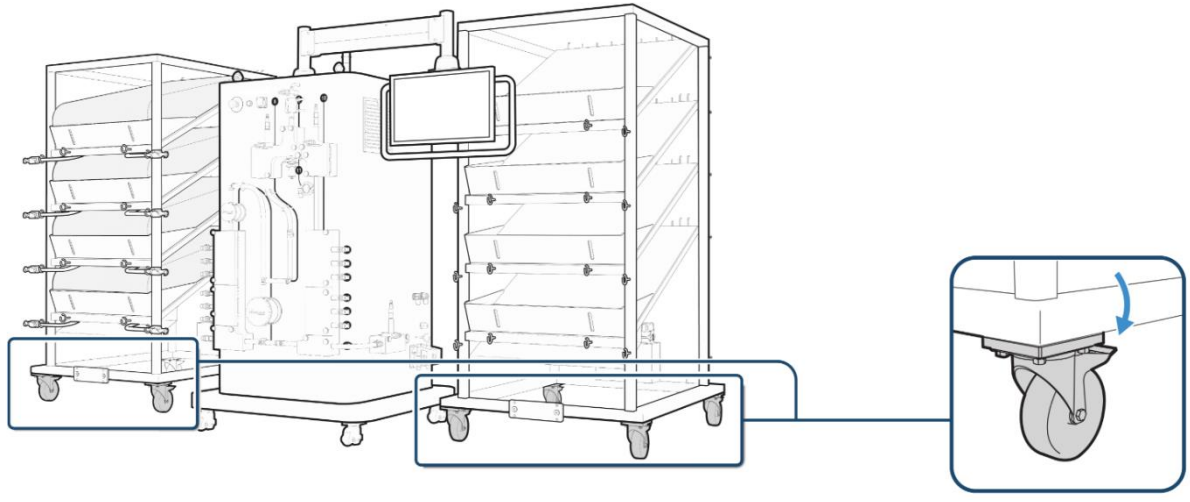

Step 11.

Make workstation to skid manifold connections

- Stock buffers – Using the biocontainer outlet ports on the stock buffer workstation, connect the following using extension SU tubing:
    1. Shelf A to Port 7
    2. Shelf B to Port 5
    3. Shelf C to Port 4
    4. Shelf D to Port 2
    5. Outer workstation will be Shelf B to Port 6 and Shelf C to Port 3

This is the default configuration, connect as per the inputted recipe

- Process buffers – Using the port outlets on the main skid to the biocontainers on the process buffer workstation, connect the following using extension SU tubing:
    1. Port 12 to Shelf A
    2. Port 14 to Shelf B
    3. Port 15 to Shelf C
    4. Port 17 to Shelf D
    5. Outer workstation will be Shelf B to Port 13 and Shelf C to Port 16

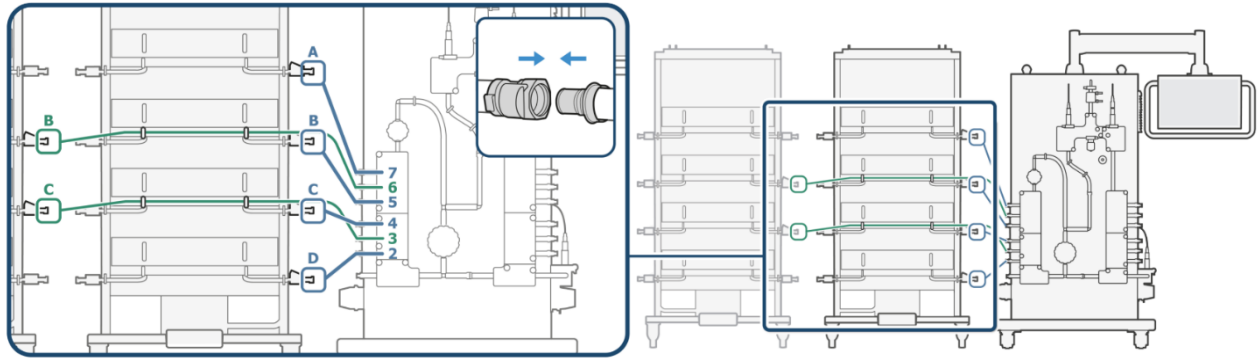

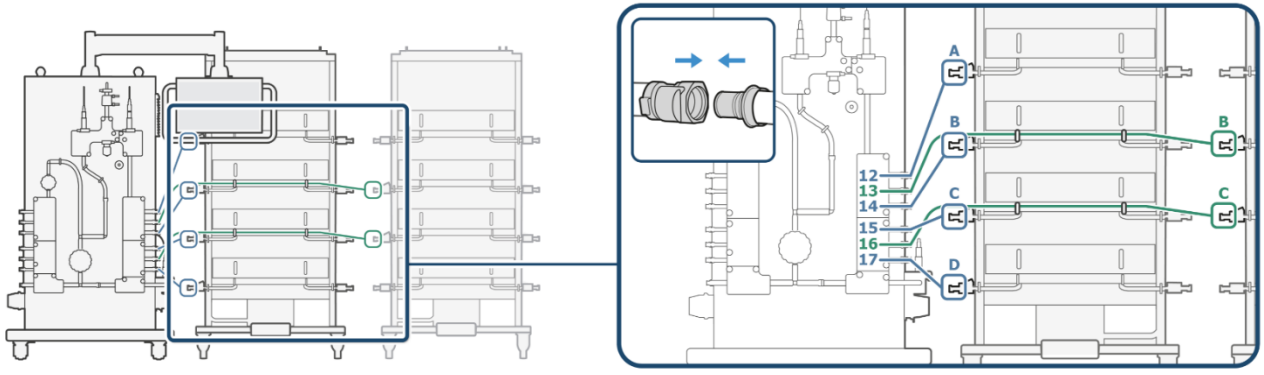

This is the default configuration, connect as per the inputted recipe

For 1.6 m (5.3 ft.) extension tubing for outer workstations, clip tubes into the retaining clips present on the inner workstation on the adjacent shelf

- Make Harting® connections between skid and workstations
- Make Harting connections between inner and outer workstations

This connection can be made prior to recipe start if desired

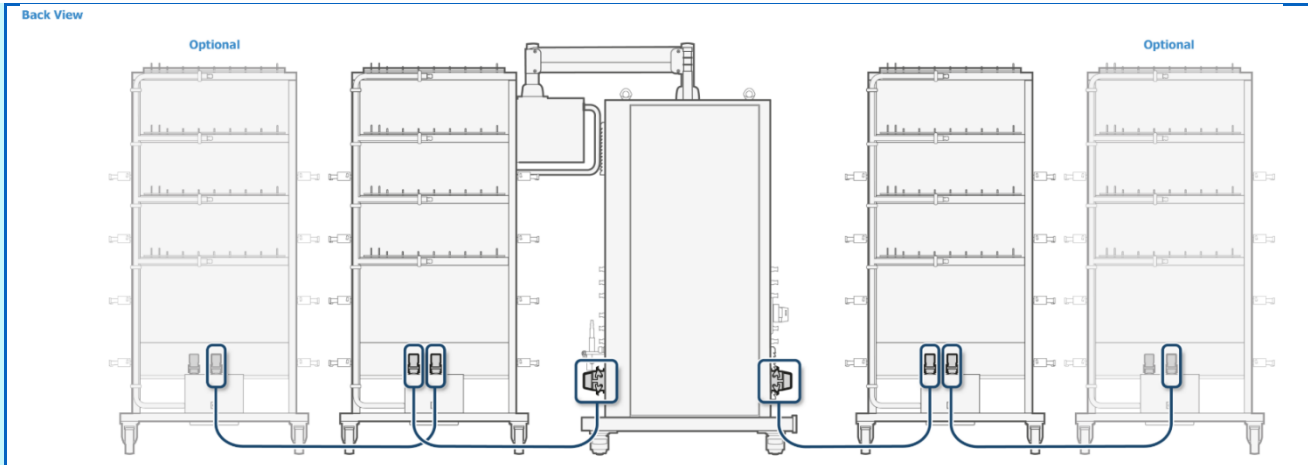

Step 12.

Fitting of filter trolley (*Optional*)

If sterile manifolds are used, tubing will be pre-assembled they will use Kleenpak Presto connectors, non-sterile will use CPCs and Tri-Clover connectors

- Fit the bleed manifold into the clamps on the filter trolley, and place waste container in holder
- Fit the inlet tube kit to the filter, clamp in place

The system can fit up to six filters on to the filter trolley

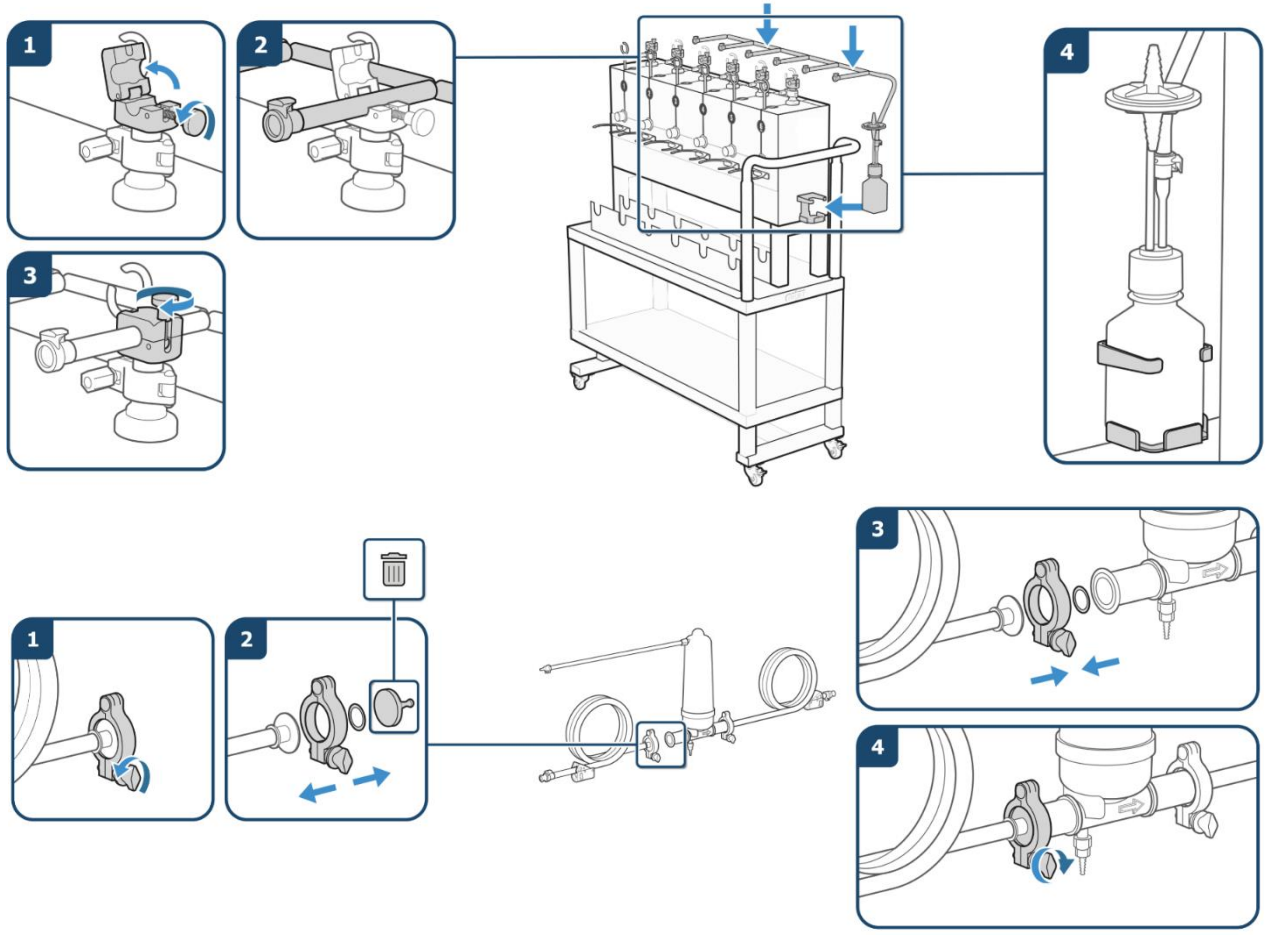

- Put filter into holder on filter trolley ensuring the 'flow direction' is in the correct orientation
- Connect the filter vent tubing into the bleed manifold
- Move the filter trolley and workstations into place, lock castor wheels

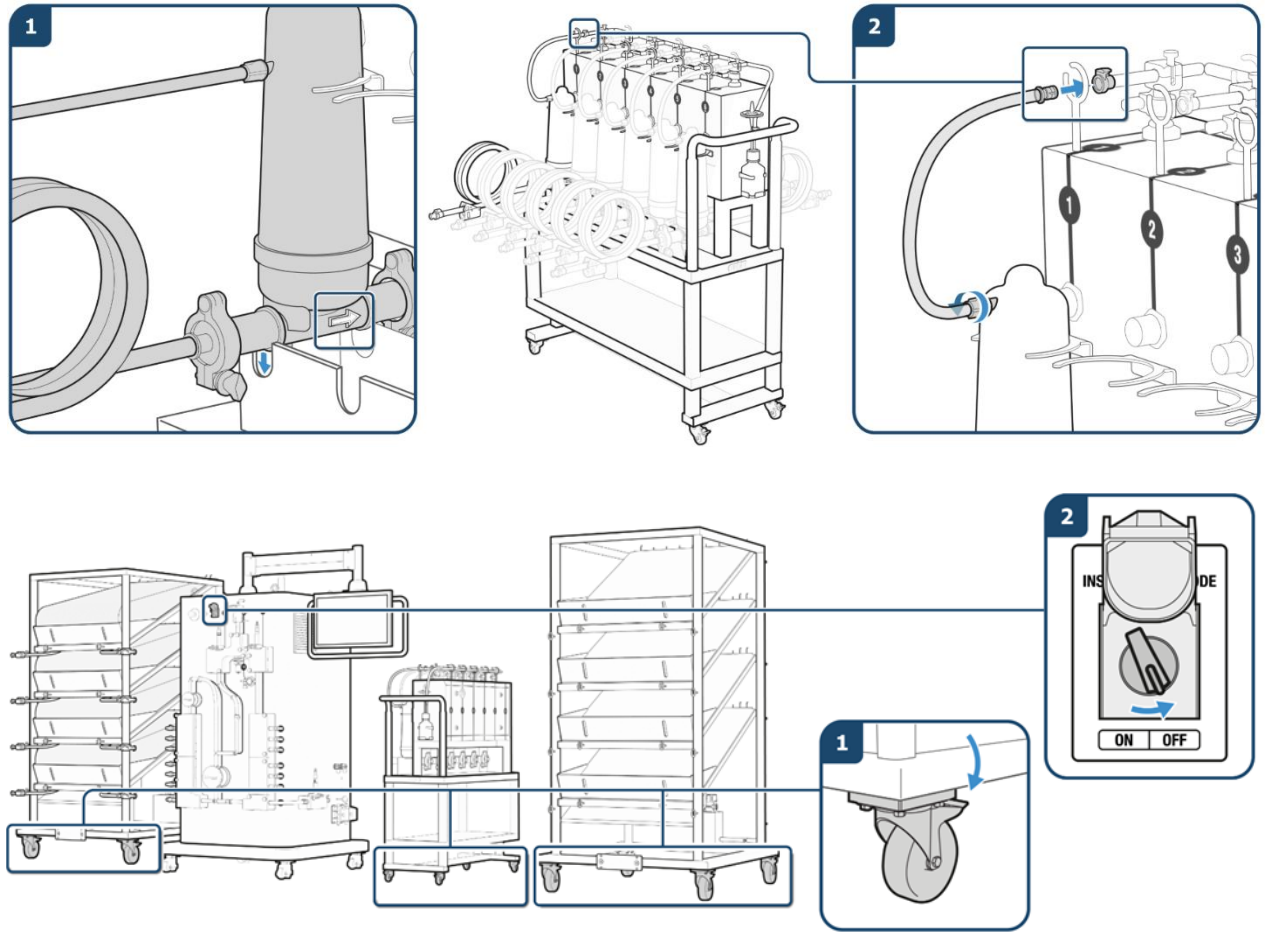

- Make Harting connections to the skid
- Install SU biocontainers on the workstations refer to Step 8 'Install biocontainers on workstation'

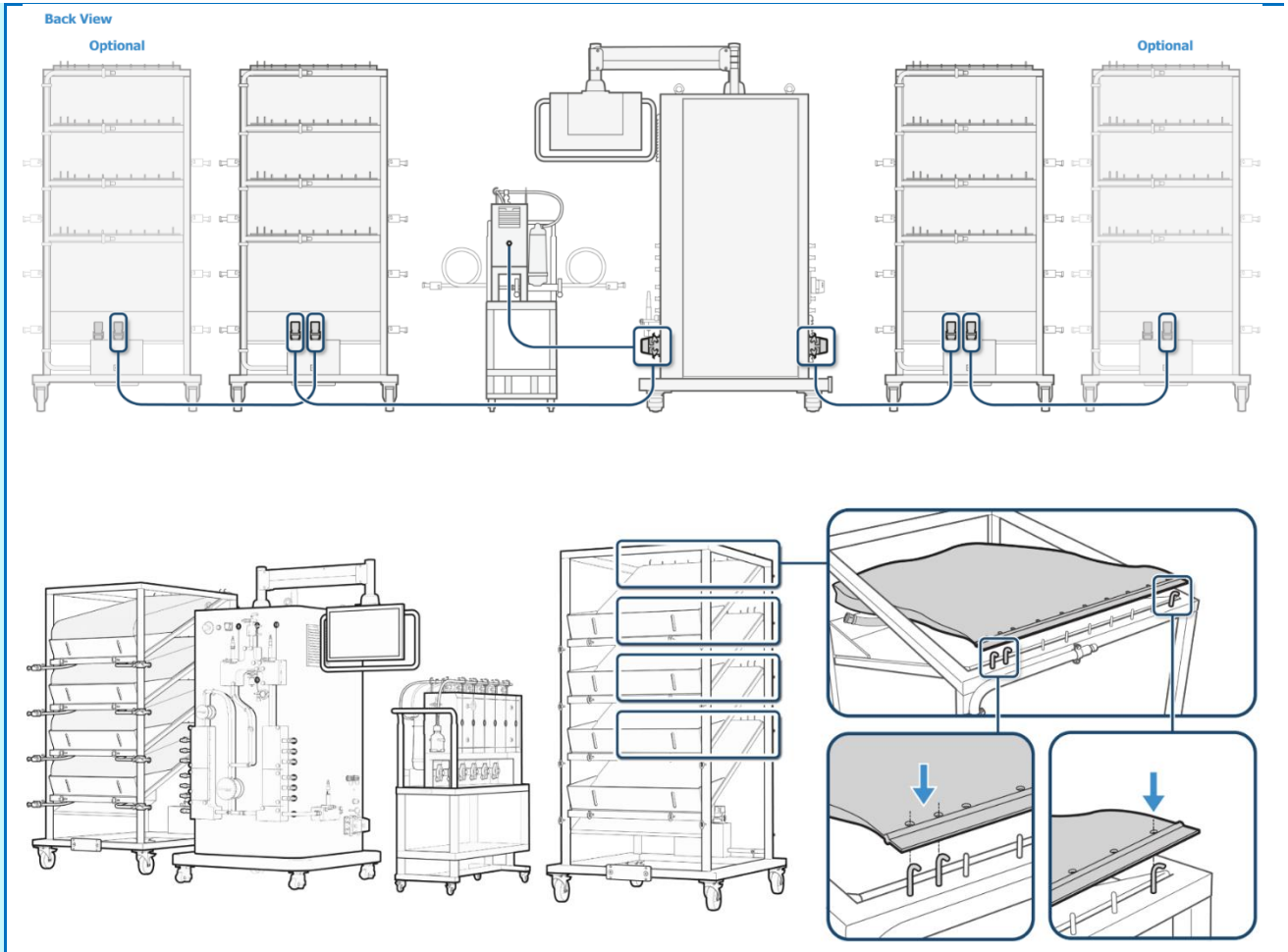

- Connect the filter inlet tubing to the process buffer outlet port on the skid

Filter positions and manifold outlet connections are set up as per the inputted recipe flow path

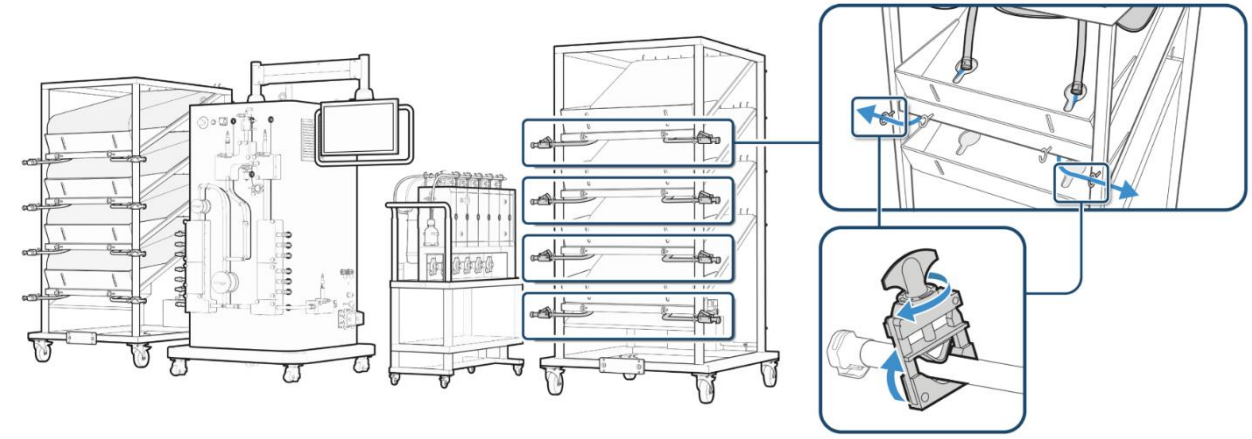

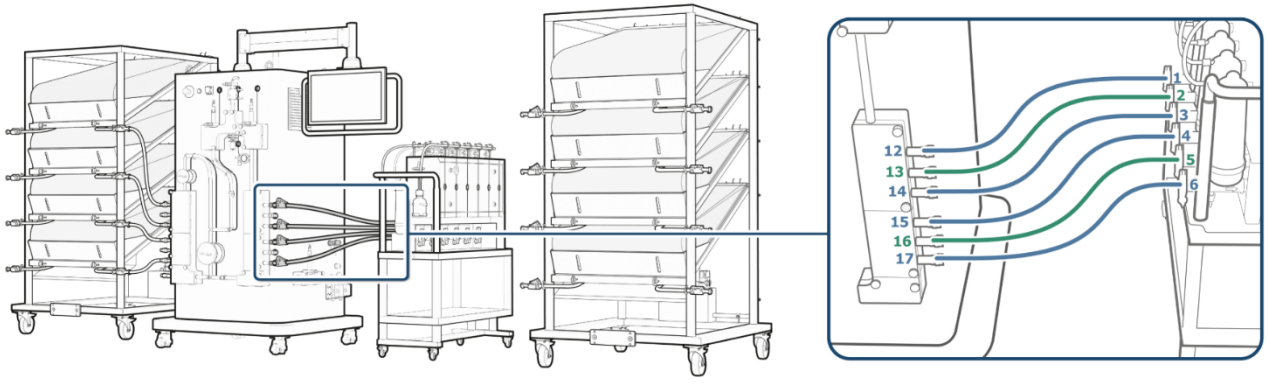

- Fit the outlet tube kit to the filter, clamp in place, and connect the other end of the tubing to the process buffer biocontainer inlet port on the process buffer workstation

Filter positions and biocontainer connections are set up as per the inputted recipe flow path

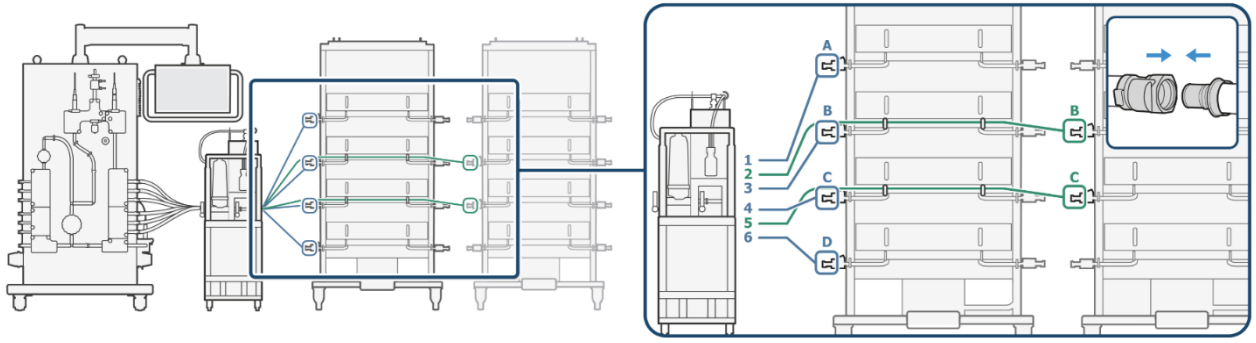

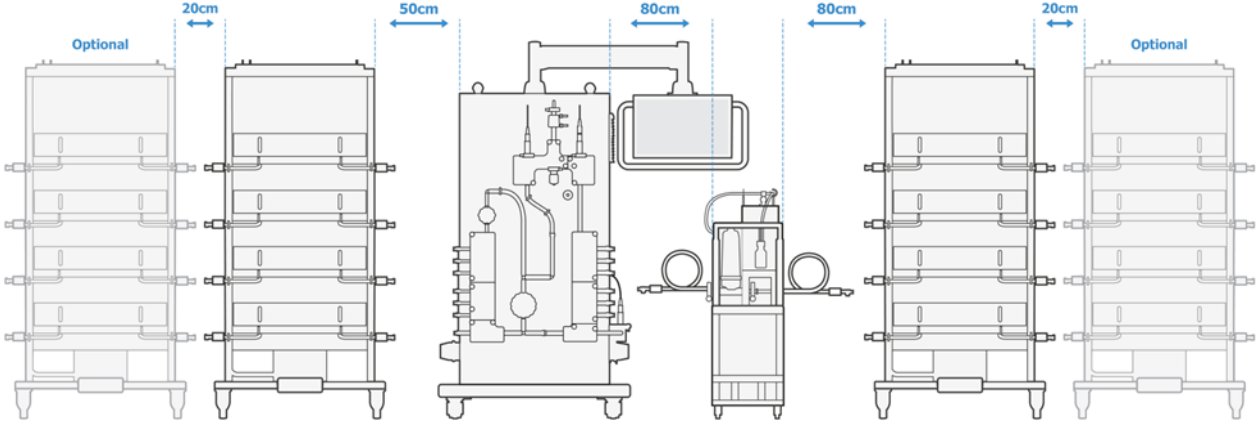

Step 13.

Switch on system and make drain/WFI connections

- Turn off manual installation mode on the skid
- Connect WFI feed tubing to port 1 of manifold on the main skid via a ½ in. female CPC connector
- Connect waste tubing to the outlet of the drain manifold using a ½ in. male CPC connector

Ensure tubing does not present any tripping hazard or have any kinks in it

- Open WFI feed line

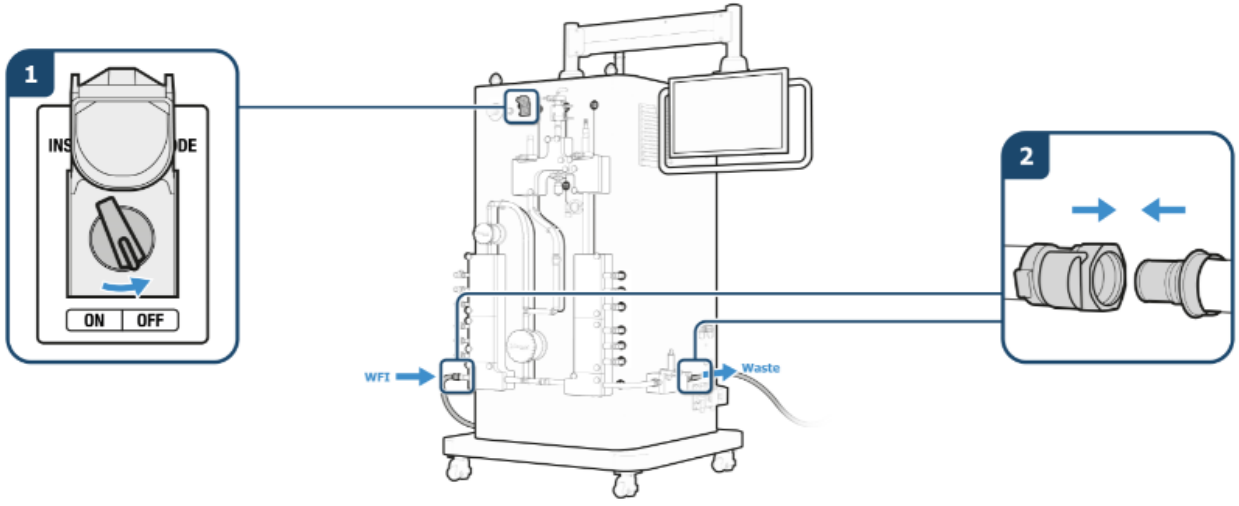

Step 14.

Operation of buffer management skid: Integrity test phase

- Ensure the pressure gauge is set to the desired integrity test (IT) pressure
- When the IT is complete, click the exclamation mark in the header and acknowledge whether it has been passed or try again if it has failed

This is set by opening the back of the buffer management system and increasing/ decreasing the pressure on the white gauge

- Ensure the water line is open, to enable the manifold to be filled for the pH renature
- When the manifold is filled and the pump switches off, click the exclamation mark in header to see the sensor is renaturing then close
- When the sensor has finished renaturing, click the exclamation mark in the header and acknowledge

Step 15.

Operation of buffer management skid: Concentrate sampling phase *(Optional)*

- The buffer management system will automatically sample each of the stock buffer biocontainers connected in turn

The conductivity and pH set-points for each concentrate can be seen on the HMI by pressing the relevant biocontainer on the process tab

Real-time sensor readings can be visualized on the HMI by the trends tab

- Once every stock buffer has been sampled, press the exclamation mark in the header
- If the stock buffers have been sampled ok, press acknowledge and continue. Prompt: 'All concentrate inlets have been sampled ok'
- If the stock buffers have not been sampled okay, either re-connect connections and re-try or abort the phase/ batch. Prompt: 'All concentrate inlets have been sampled. Please correct any connection errors and re-test'

Step 16.

Operation of buffer management skid: Maximum fill phase *(Optional)*

- The Allegro Connect buffer management system will automatically fill each process biocontainer based on the inputted recipe

The conductivity and pH set-points for each process buffer can be seen on the HMI by pressing the relevant biocontainer on the process tab

The set-point for each biocontainer can be seen on the HMI as the black line on the 'level indicator' positioned beneath each process biocontainer

- Once all process biocontainers are filled, press the exclamation mark in the header and acknowledge

Step 17.

Operation of buffer management skid: Cycle fill or draw fill phase

- The buffer management system will automatically re-fill process biocontainers when the level drops below the re-fill set-point or dead band
- This is an autonomous phase which should not require operator intervention
- To end the processing phase, click on to the recipe tab and press 'End phase'

Real-time sensor readings can be visualized on the HMI by the trends tab

Step 18.

Operation of buffer management skid: Concentrate drain phase

- Follow the automated drain down steps within the recipe
- Operator to wait until the QF150 pump has drained biocontainer 1 to minimum drain volume (default = 10 L)
- Press the prompt that appears on the HMI
- Open the IT filter vent port manually to continue draining by gravity
- Manually manipulate the extension tubes and stock buffer biocontainer to remove all liquid
- Close the stock buffer biocontainer manual clamp
- Press acknowledge on the HMI prompt
- Wait for the flush cycle to complete before then repeating the draining procedure for the remaining stock buffer biocontainers

Step 19.

Operation of buffer management skid: System drain phase

- Press the prompt which appears after manifold draining and click acknowledge
- Process buffer 1 will then start to drain via gravity
- A prompt will appear after the recipe mandated 'drain time' to check the buffer biocontainer is empty
- Open the IT filter vent port manually. (Optional: Open the process biocontainer manual clamp if the user desires to drain process buffer contents)
- ! Ensure the filter vent is still open from 'concentrate draining phase'
- When the biocontainer liquid level reaches below the biocontainer ports, manually manipulate the extension tubes and process biocontainer to remove all the remaining fluid
- Close the process buffer biocontainer manual clamps
- Press acknowledge on HMI to continue flush cycle

! This draining procedure will repeat until all process buffer biocontainers are drained

! If sterile filters are used, the process buffer biocontainers can be drained back through these filters

Step 20.

- Clamp off water feed line
- Ensure tubes on stock workstation are drained and clamped
- Ensure tubes on process workstation are drained and clamped
- Open the air filter valves

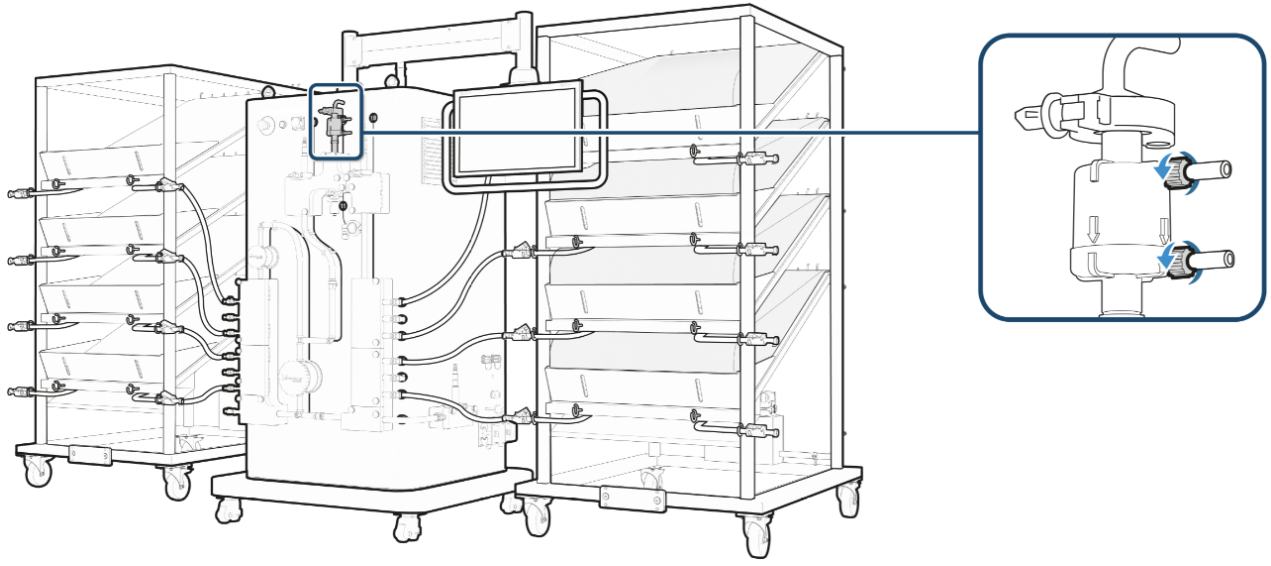

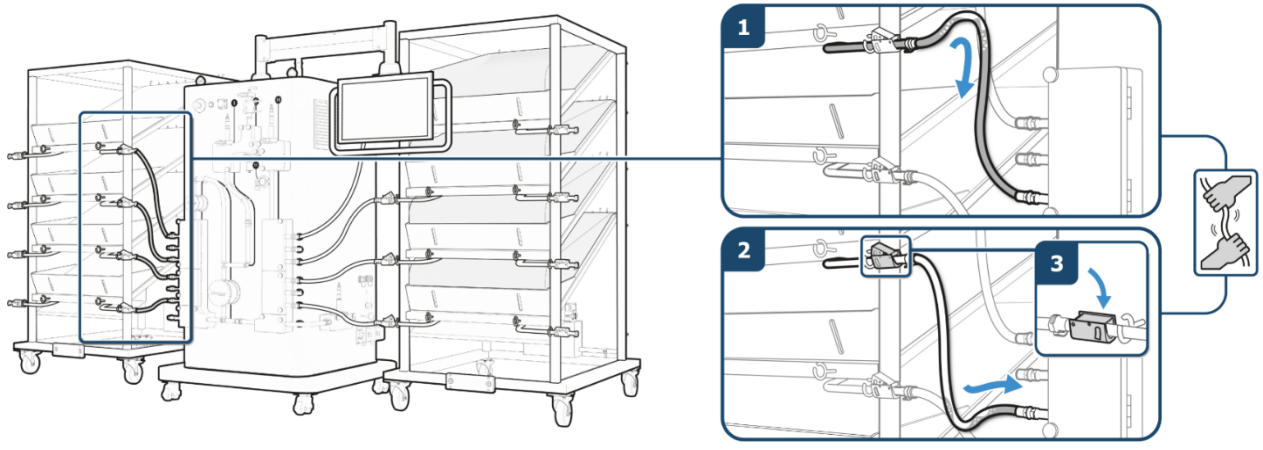

- Disconnect extension tubes from the biocontainers and the manifold

Loop extension tubes by connecting the CPCs to reduce spillage, or replace with CPC blanks

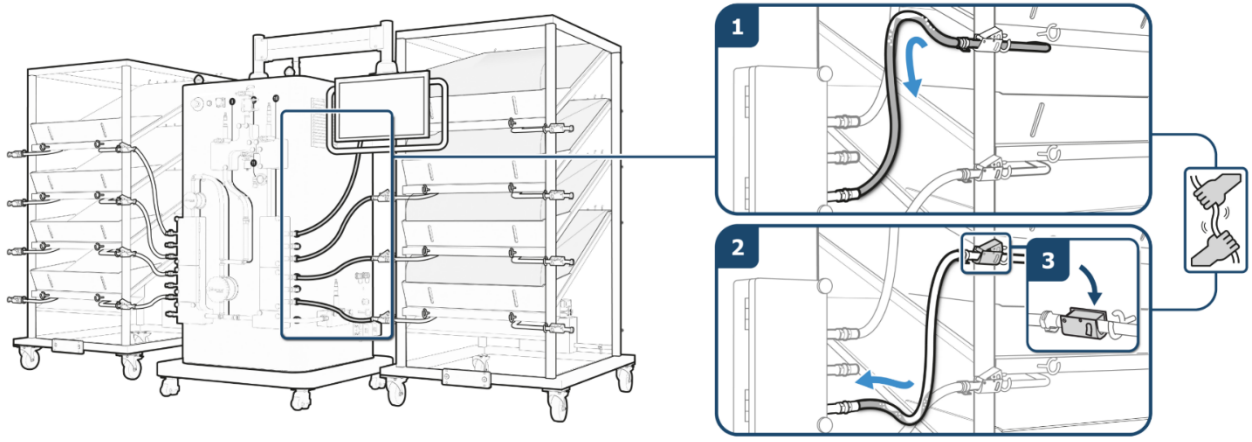

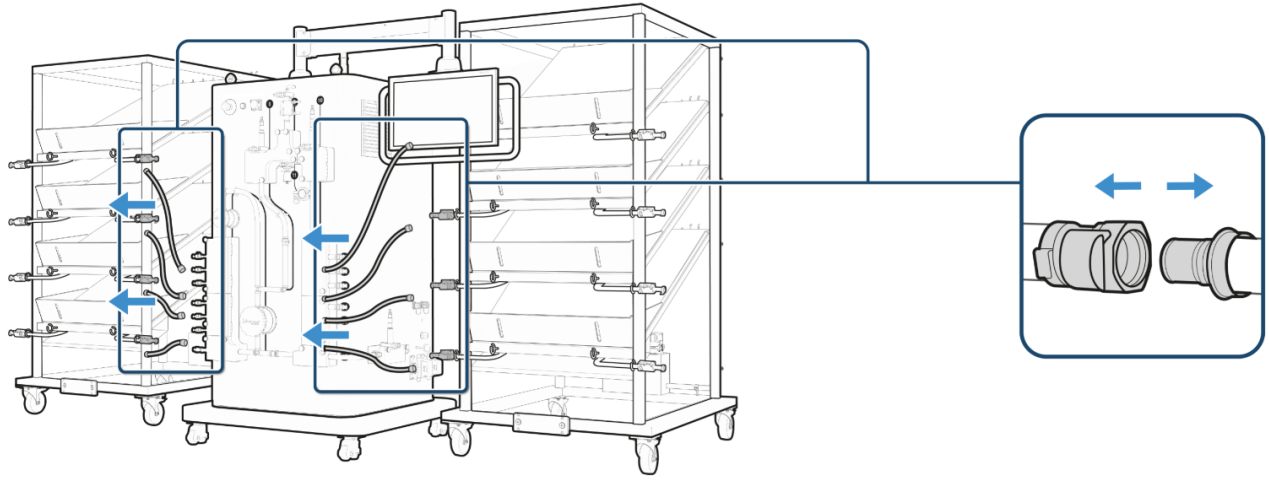

- Remove biocontainers from workstations (check for residual liquids) and activate manual installation mode (MIM)

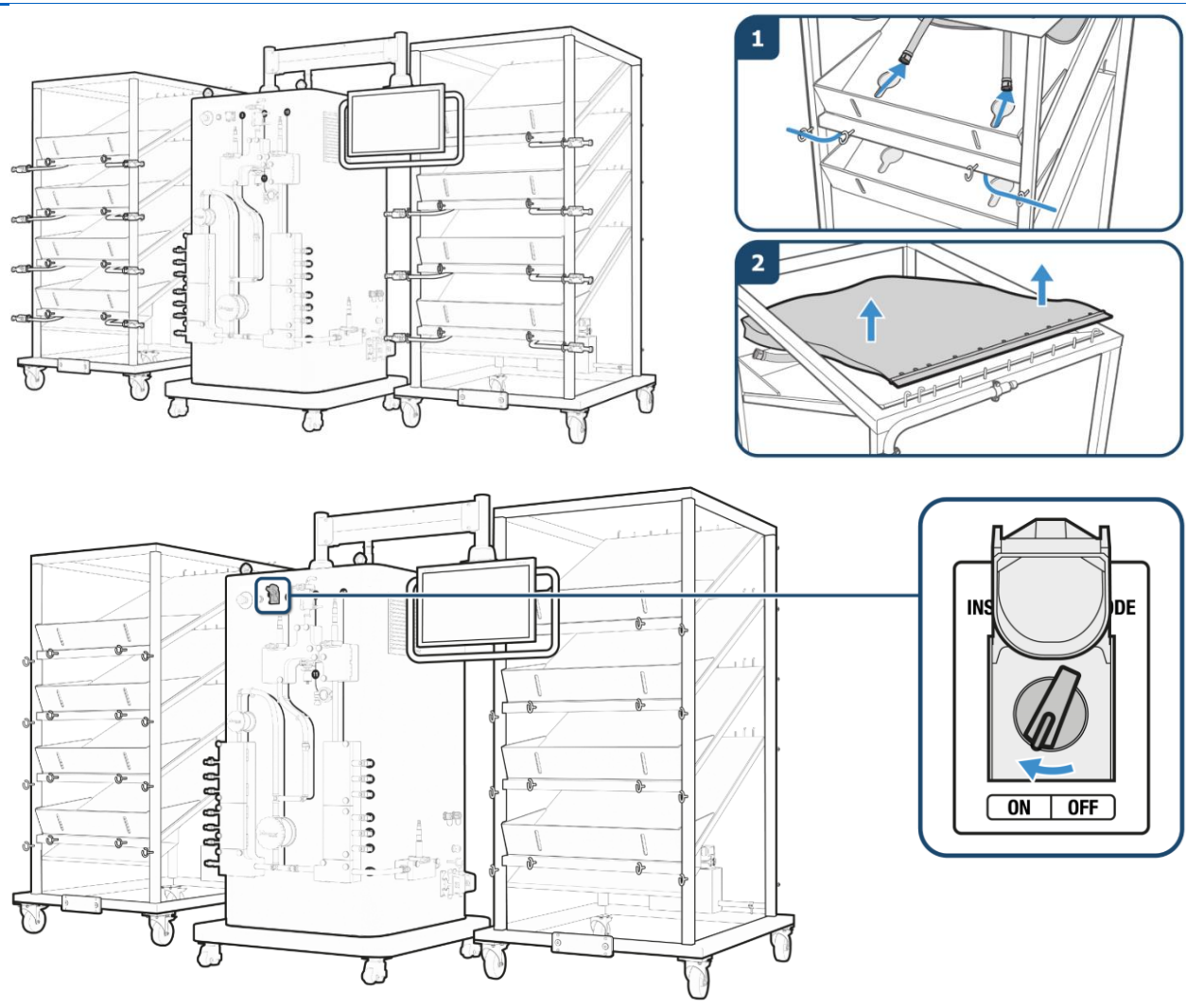

- Remove filter skid manifold (if installed) – refer to Step 21 'Filter trolley un-installation' for further details
- Disconnect the filter from the IT air supply
- Disconnect both conductivity probes and remove them from the manifold

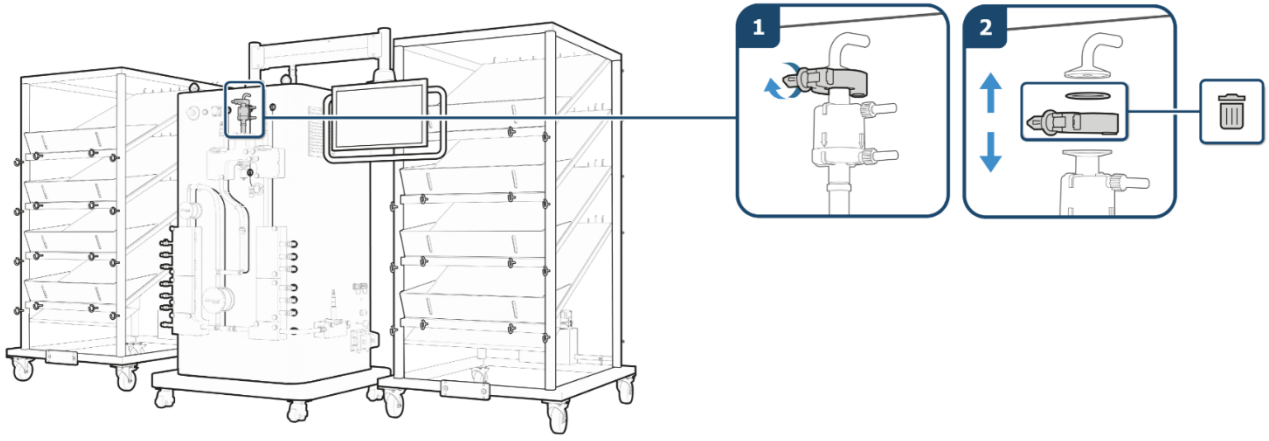

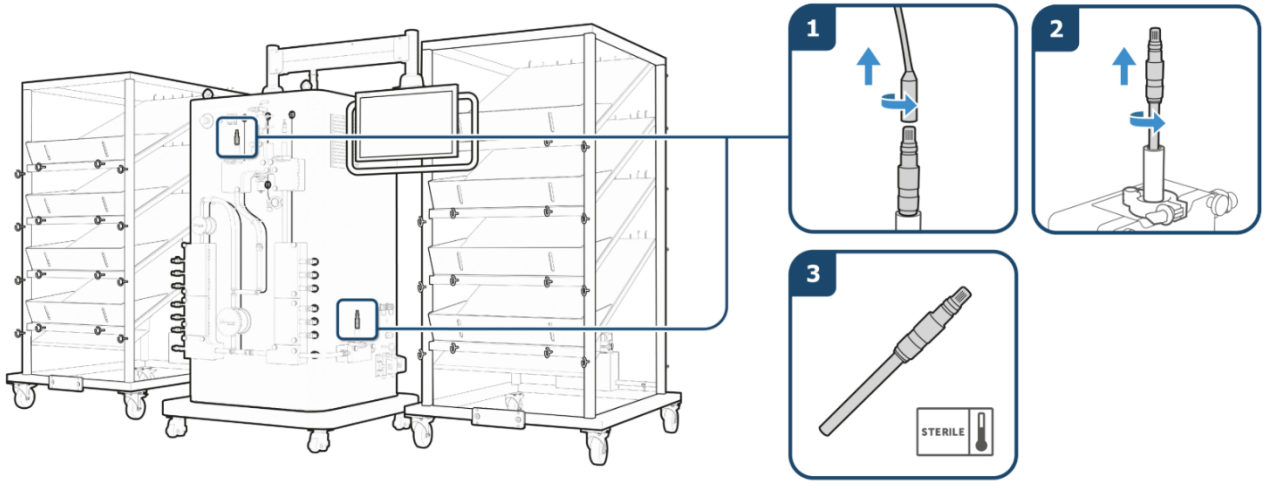

- Disconnect the pH probe from the Arc head
- Disconnect the pressure sensor and re-clamp to the hardware mounting point

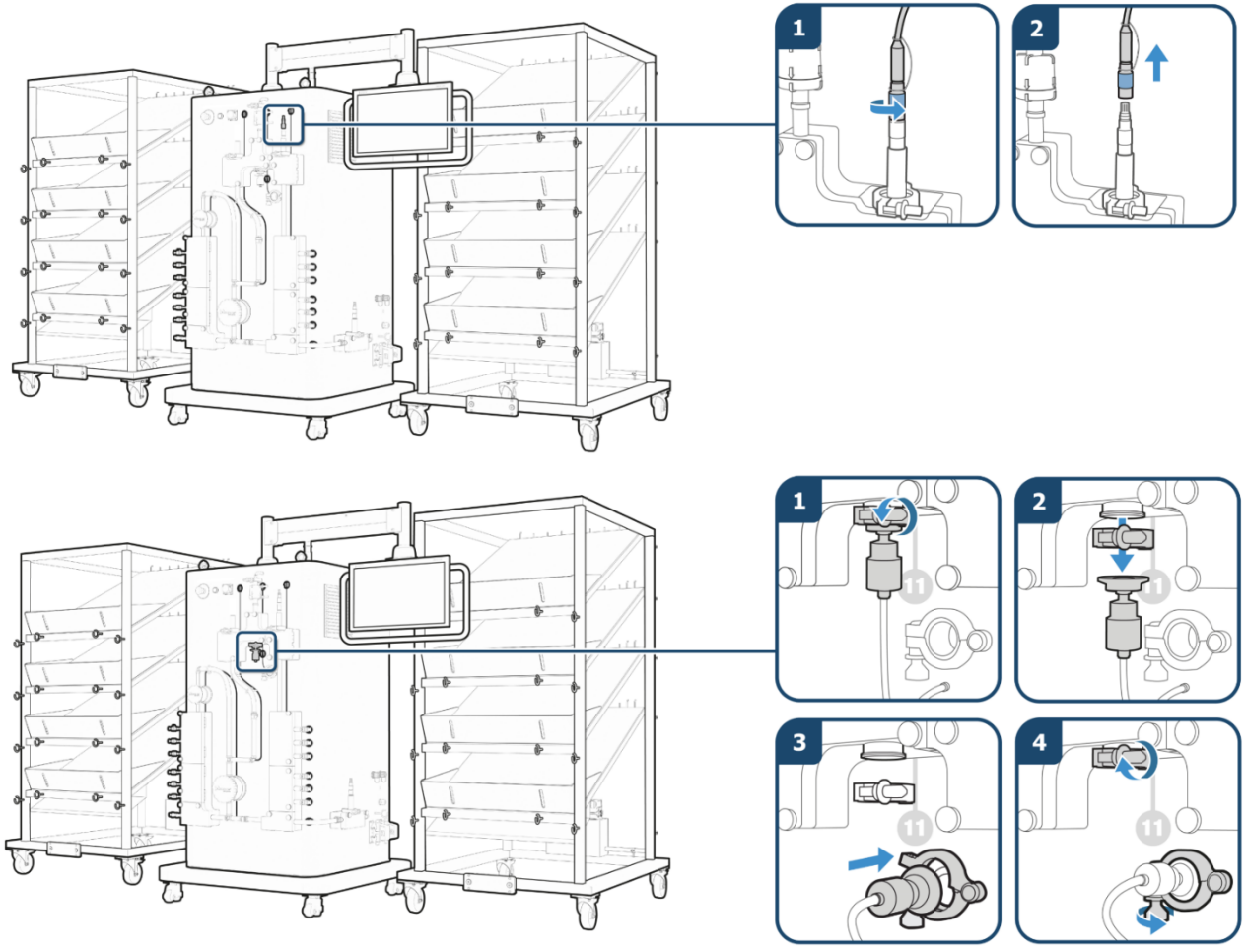

- Remove pump heads by unscrewing anti-clockwise
- Open the drain block and remove drain manifold

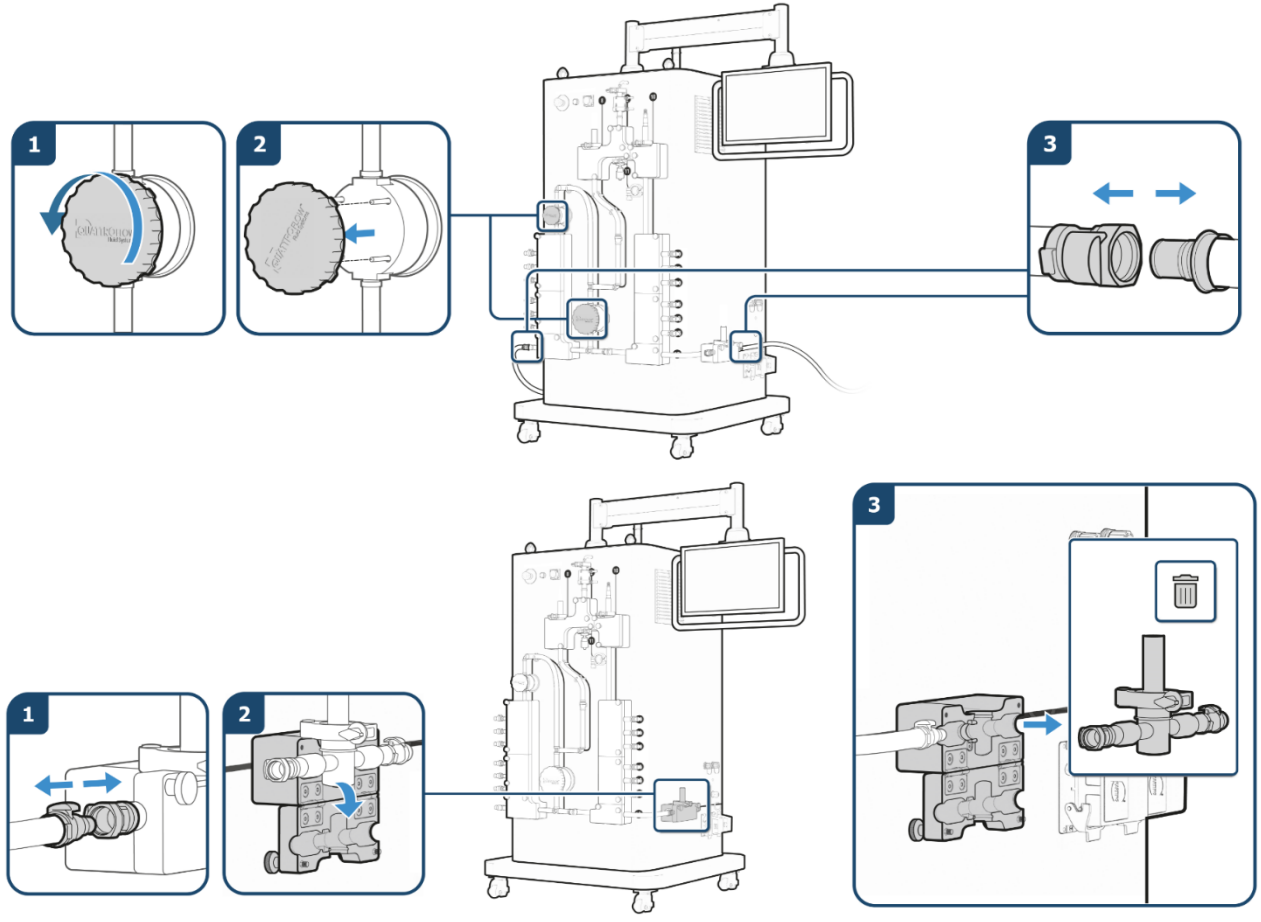

- Open valve blocks and remove the inlet/outlet manifolds
- Close valve blocks
- Put pump head plates back on skid

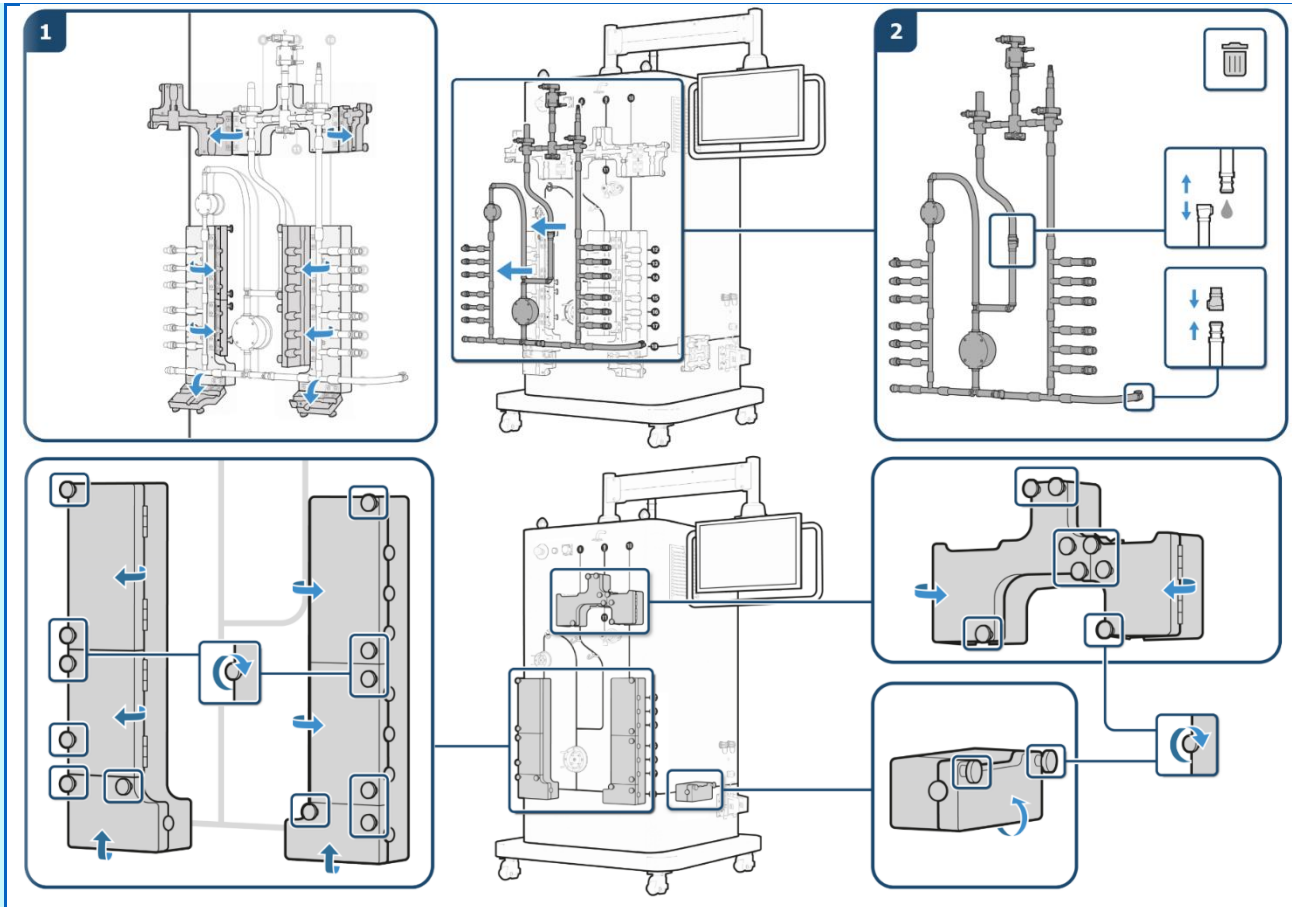

- Deactivate the manual installation mode

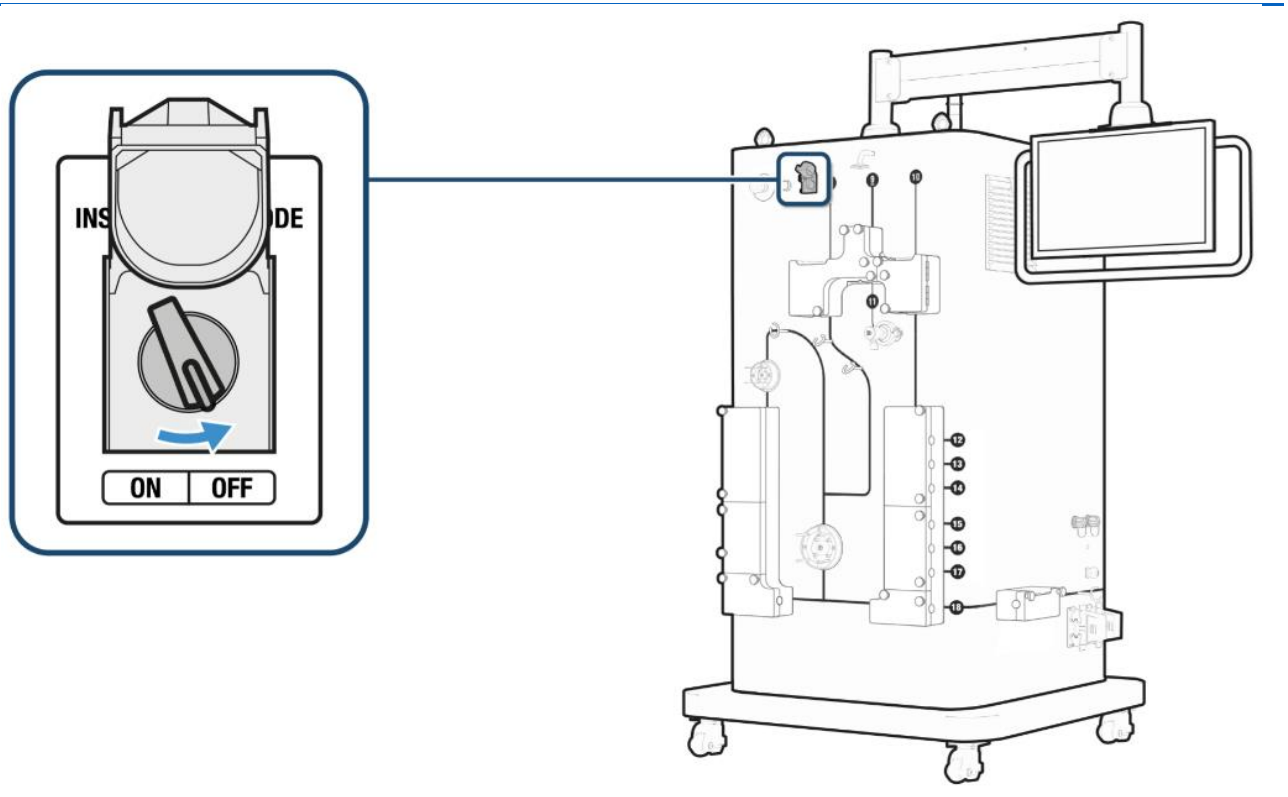

Step 21.

- Clamp off water feed line
- Ensure tubes on the stock workstation are drained and clamped
- Ensure tubes on the process workstation are drained and clamped
- Open the air filter valves

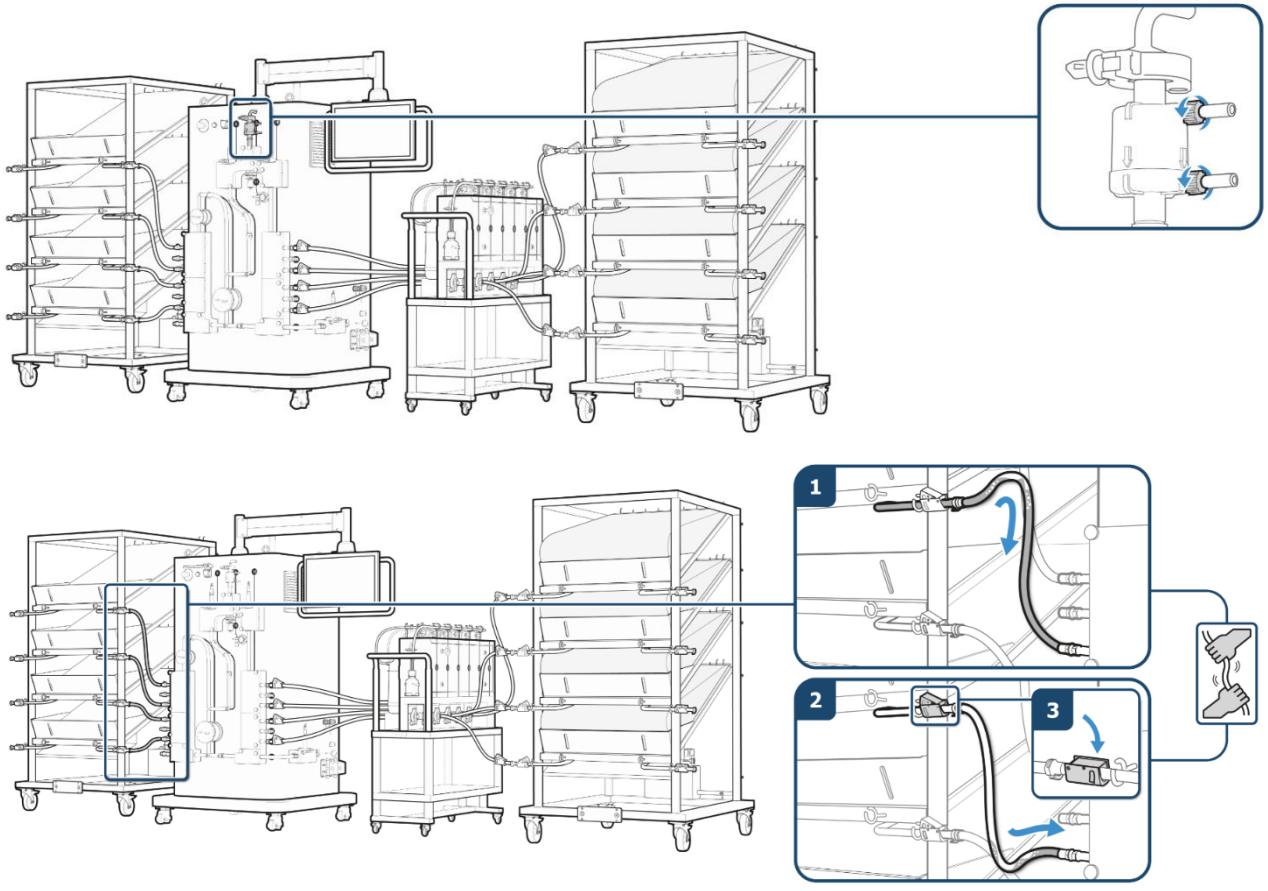

- Disconnect extension tubes from the biocontainers and the skid manifold
- Clamp and disconnect filter trolley inlet and outlet tubes from skid and process workstation, and activate MIM

Loop extension tubes by connecting the CPCs to reduce spillage, or replace with CPC blanks

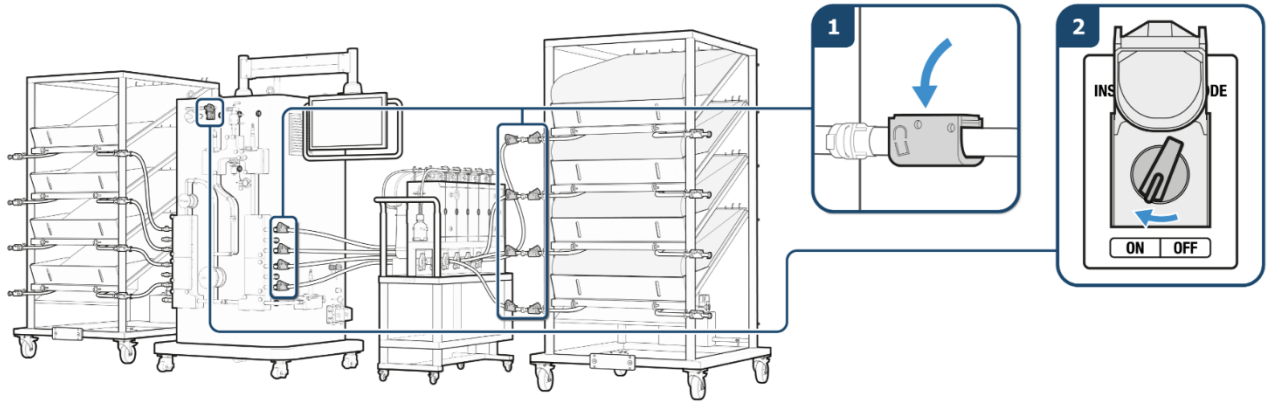

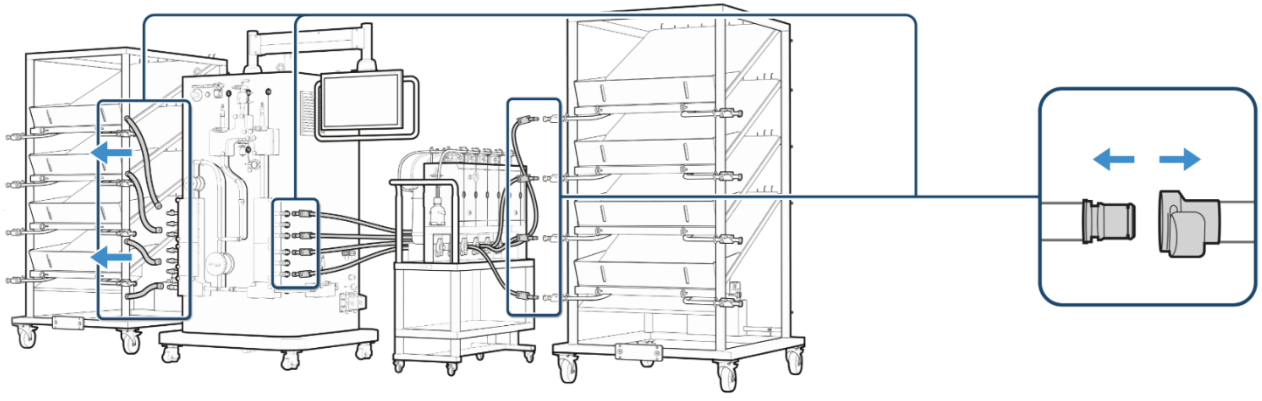

- Remove biocontainers from the workstations (check for residual liquids)
- Remove filter skid manifold by releasing clamps on the bleed manifold, disconnecting from the vent tubing on the filter, and remove filter with tubing from trolley. Dispose of components

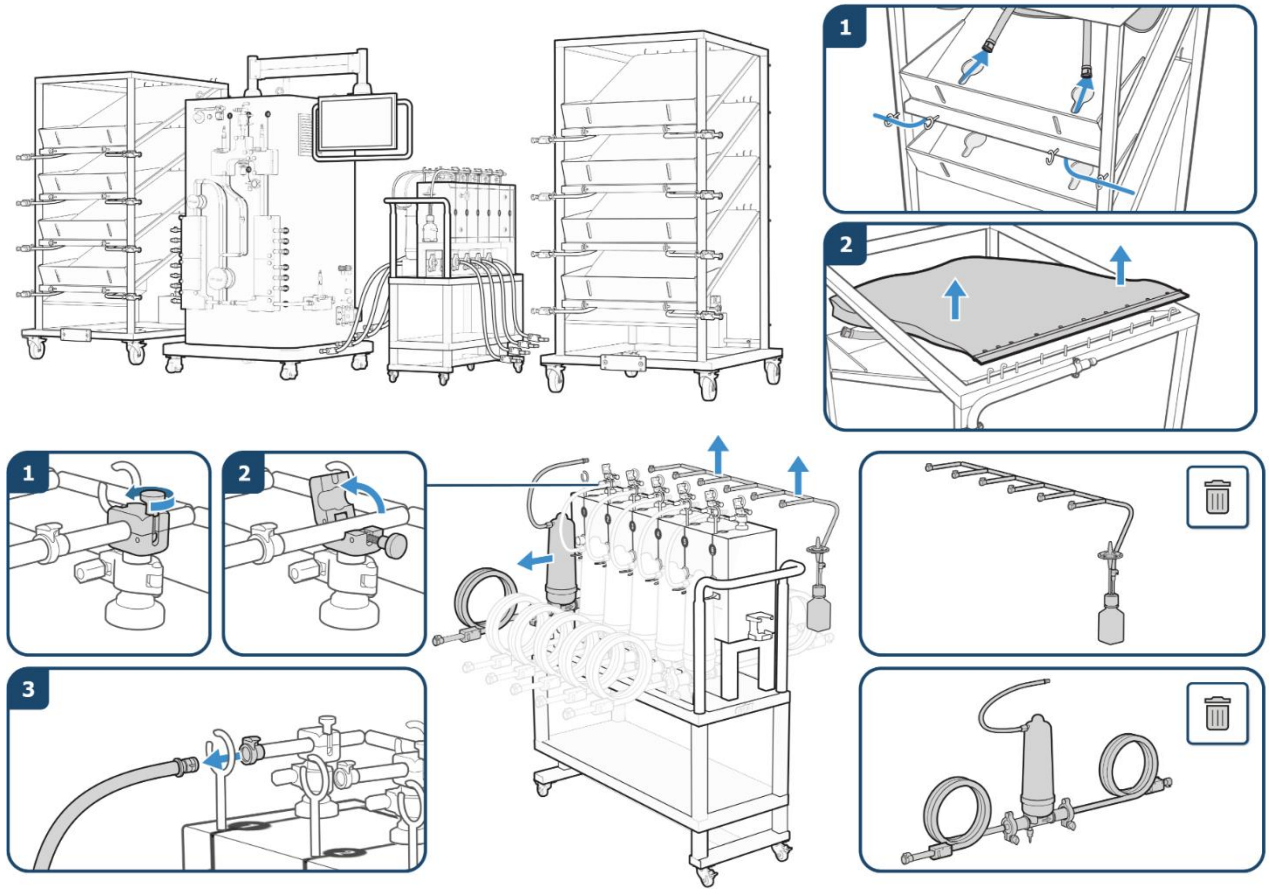

- Disconnect the filter from the IT air supply
- Disconnect both conductivity probes and remove them from the manifold

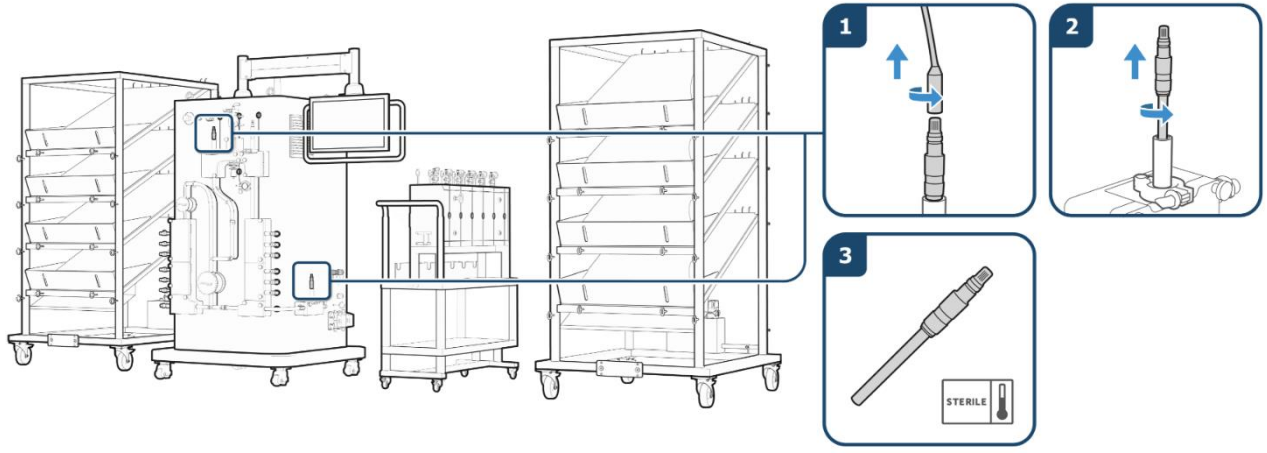

- Disconnect the pH probe from the Arc head
- Disconnect the pressure sensor and re-clamp to the hardware mounting point

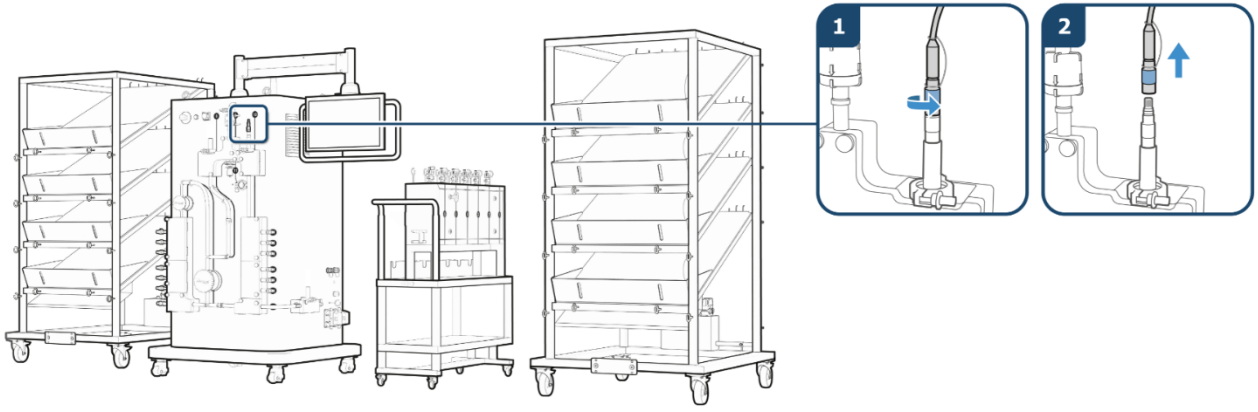

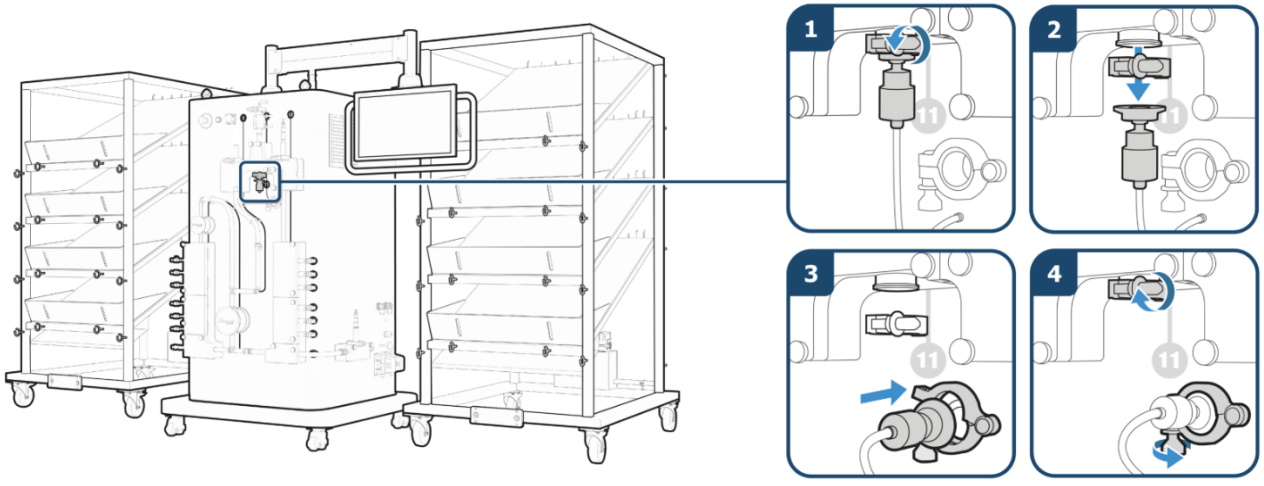

- Remove pump heads by unscrewing anti-clockwise
- Open the drain block and remove drain manifold

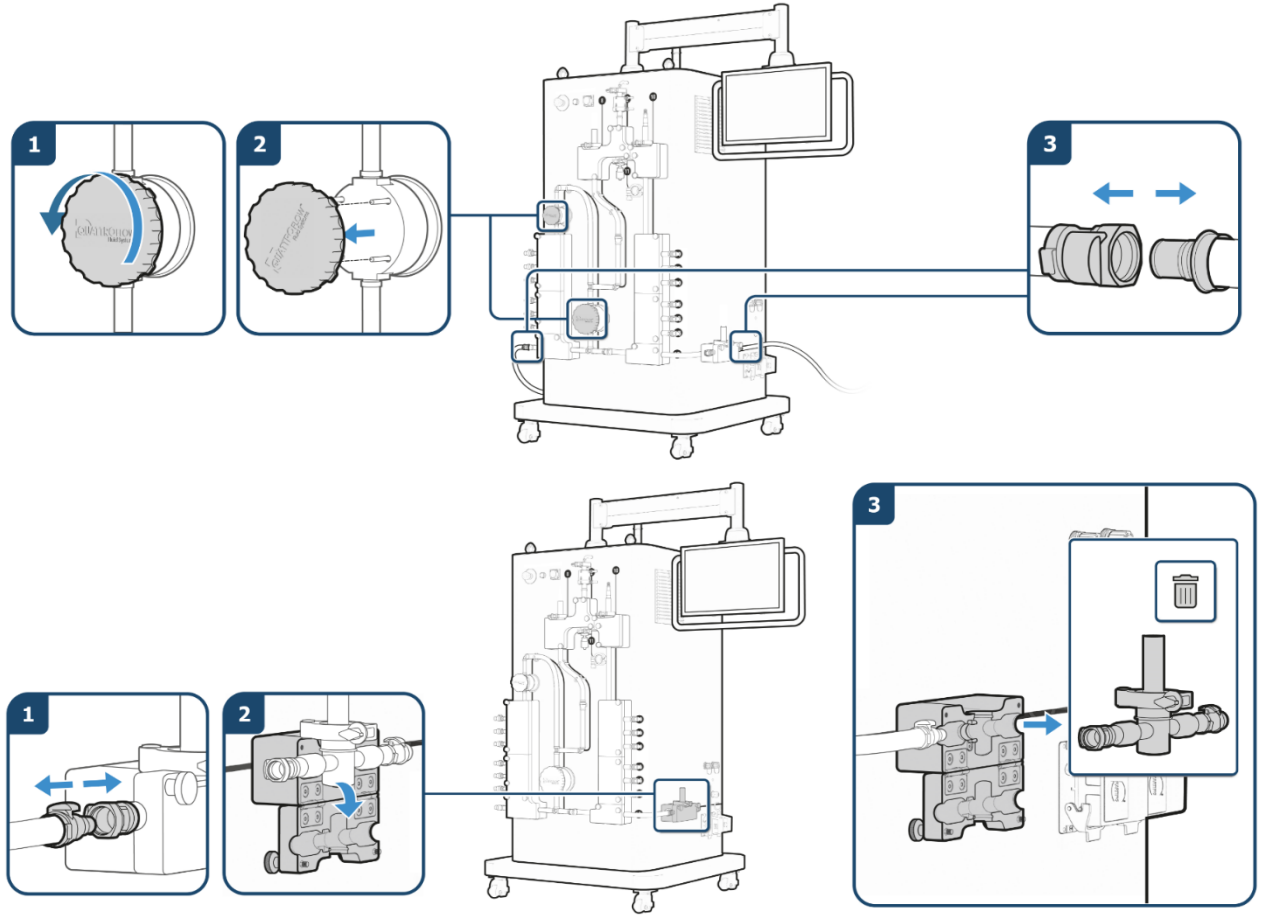

- Open valve blocks and remove the inlet/outlet manifolds
- Close valve blocks
- Put pump head plates back on skid

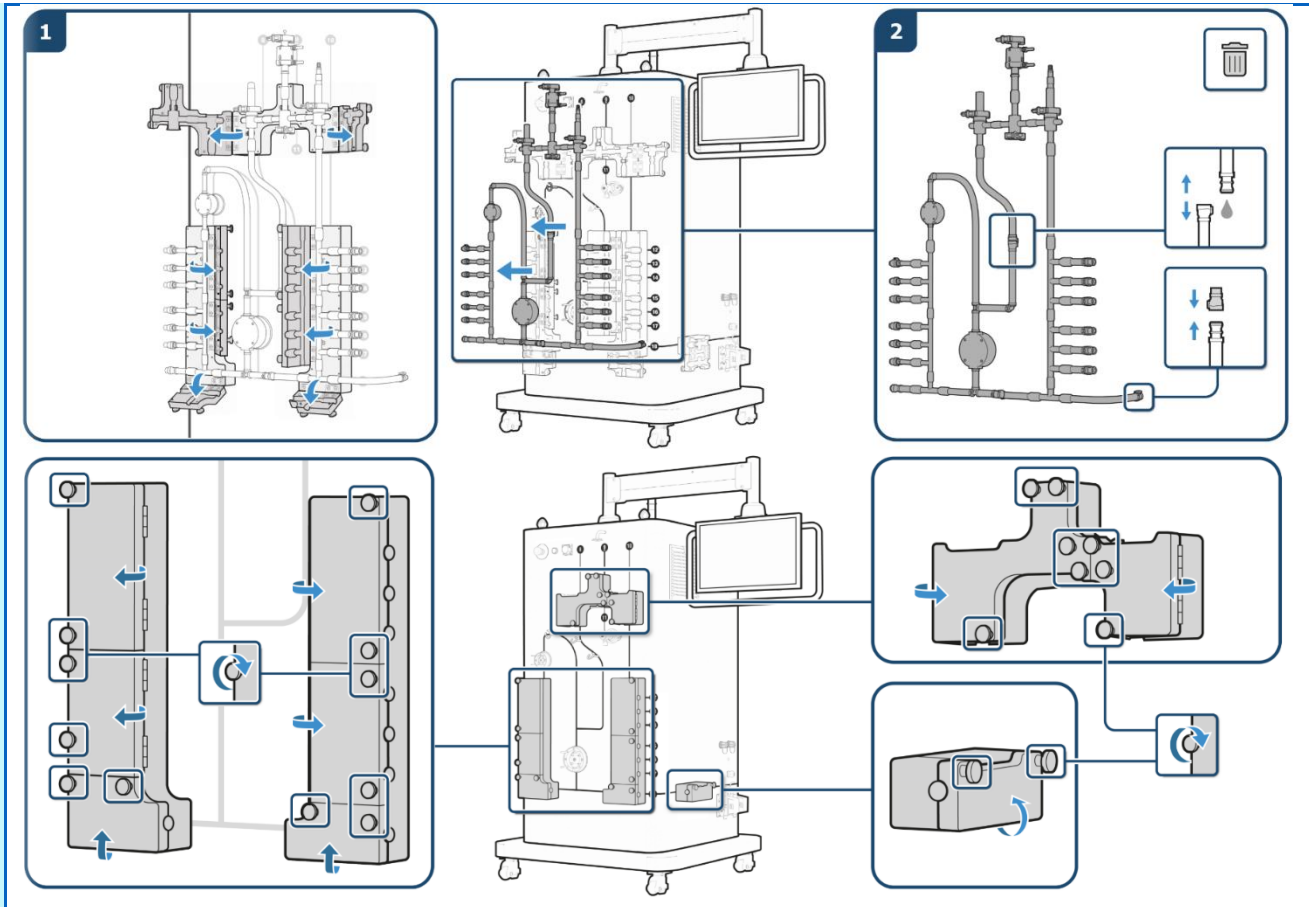

- Deactivate the manual installation mode

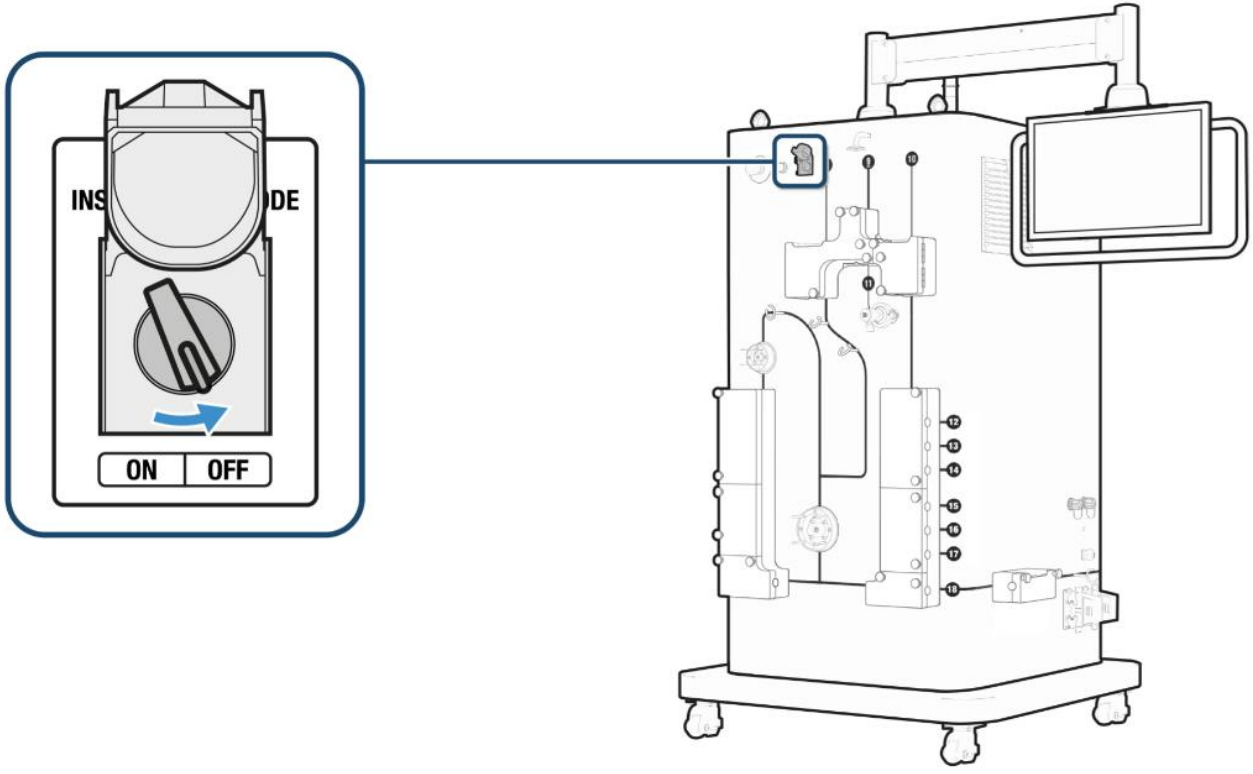

7 Allegro Connect Buffer Management System Functionality

The following functionality and user instructions are intended to guide the user in operation of the system for daily operations. For detailed information on system functionality and recipe writing, please refer to the supporting manuals.

7.1 Dashboard

The dashboard gives an overview of important actual measurements and batch information.

Each configured buffer displays information about the corresponding stock / process solution level.

Figure 10

Allegro Connect buffer management skid dashboard

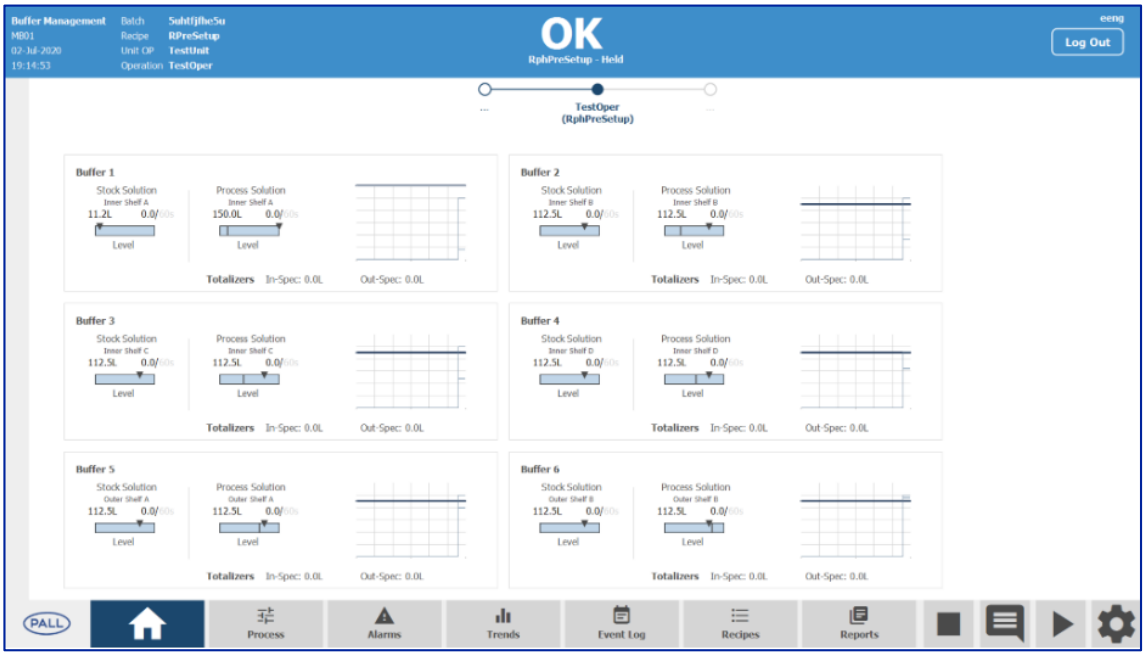

7.1.1 Process Screen

The process screen is accessed from the “Process” button in the screen footer and gives a simplified overview of the current process. Important measurements and actuators are displayed on the screen.

Figure 11

Skid process screen

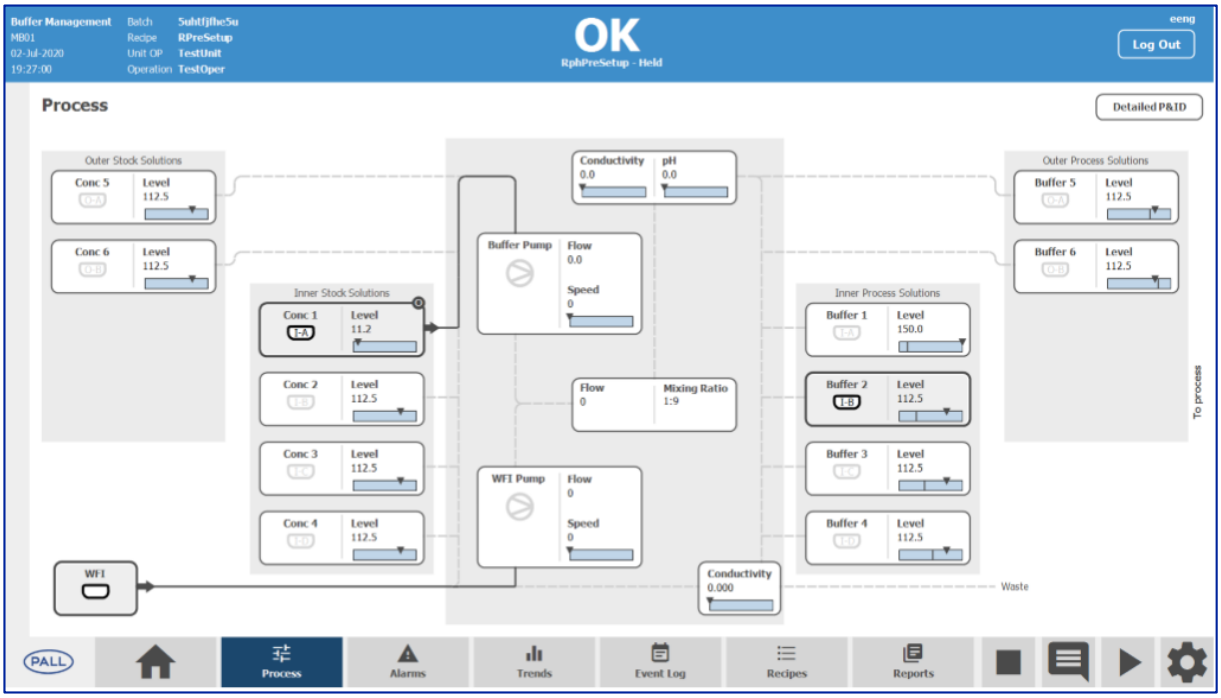

7.1.2 P&ID Screen Inlets Pumps

The P&ID screen gives a detailed view on the inlet and pump section of the skid. The functionality is equivalent to the process screen.

Figure 12

Process inlets pumps screen

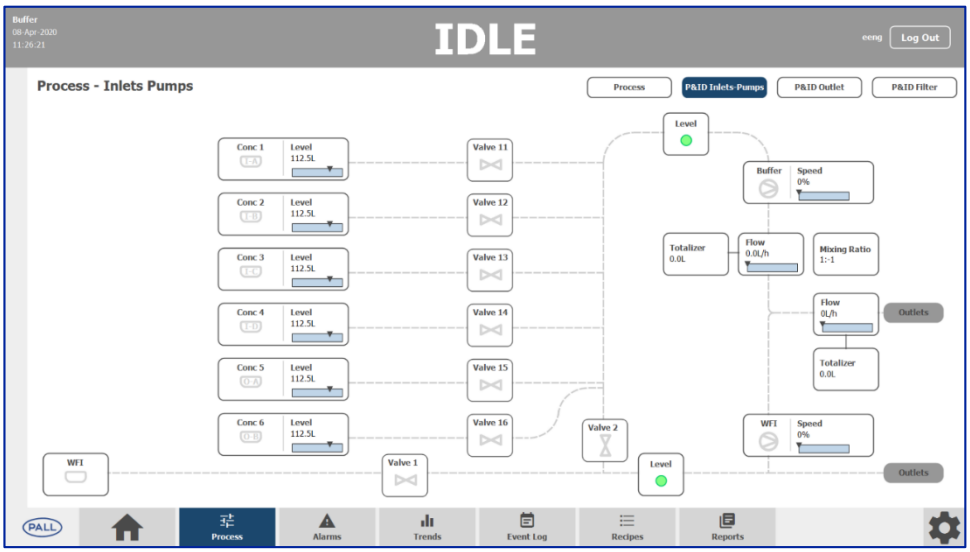

7.1.3 P&ID Screen Outlet

The P&ID screen gives a detailed view on the outlets and the drain section of the skid. The functionality is equivalent to the process screen.

Figure 13
Process outlets screen

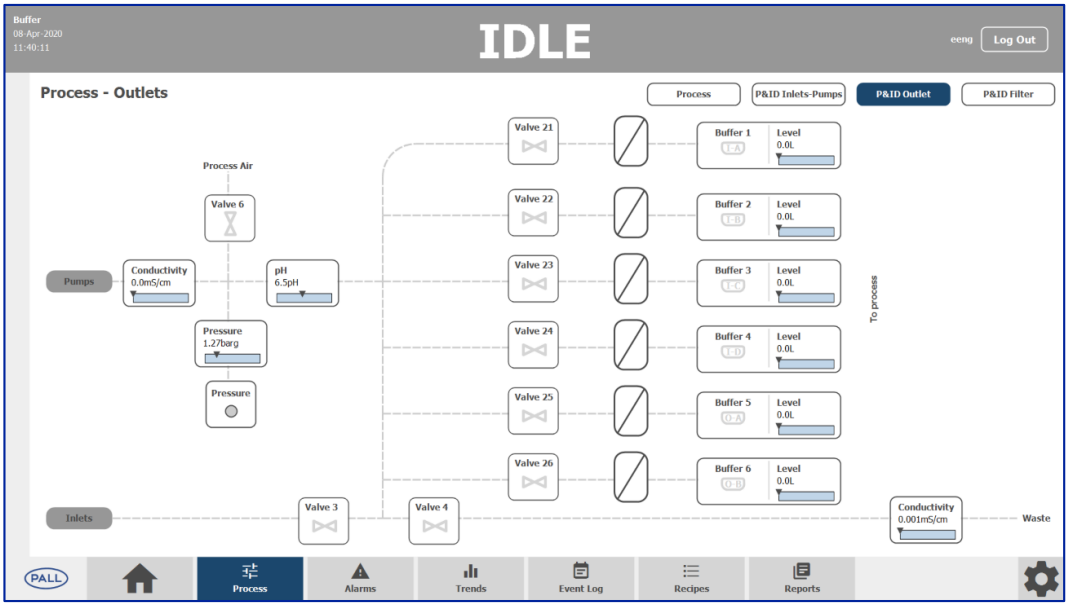

7.1.4 P&ID Screen Outlet Filter

The P&ID screen gives a detailed view on the outlet filter section of the skid. The functionality is equivalent to the process screen. The screen is only accessible if the filter skid is installed and enabled.

Figure 14
Process filters screen

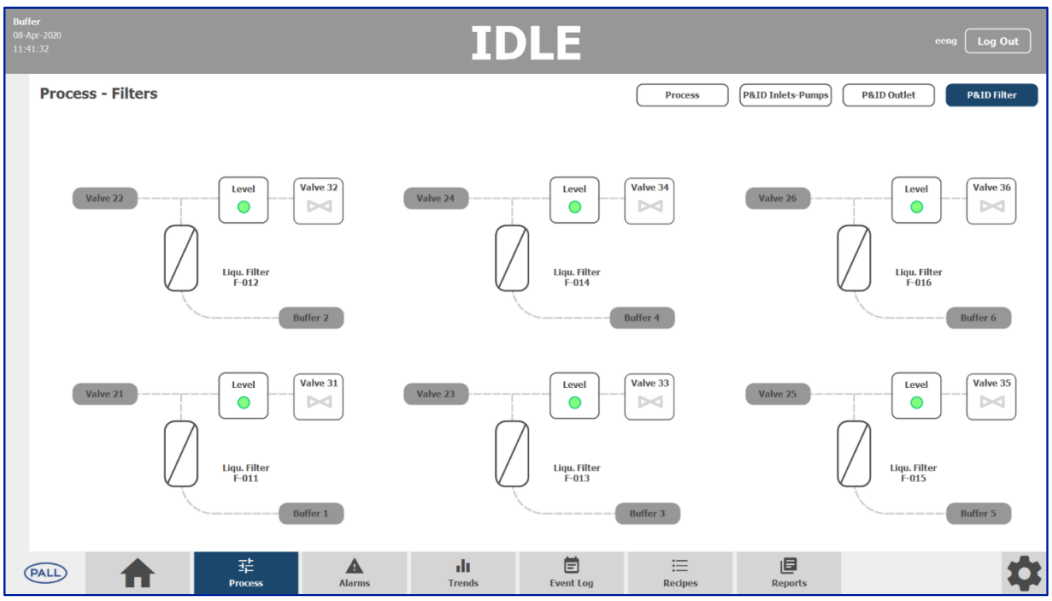

7.2 Alarms

The alarms screen shows active and inactive alarms.

Figure 15

Alarm screen

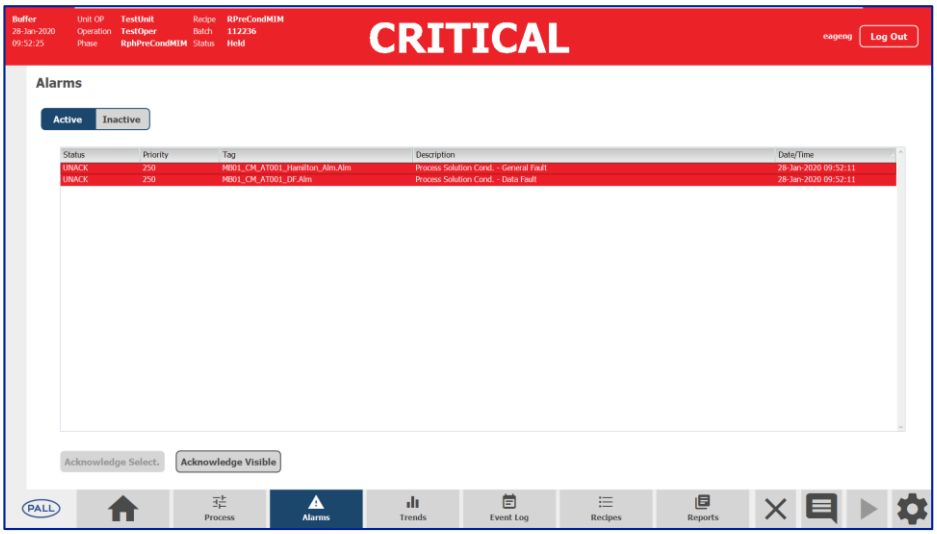

On the active alarm page, current pending alarms can be monitored and acknowledged. There are two acknowledge options available:

- Acknowledge Selection: Only the selected alarm will be acknowledged (only possible if an alarm is selected)
- Acknowledge Visible: All visible alarms in the list will be acknowledged

On the inactive alarm page, historic alarms can be monitored. A time window can be defined for the query.

7.3 Trends

The trends screen enables the user to monitor trend curve history.

Figure 16
Trends screen

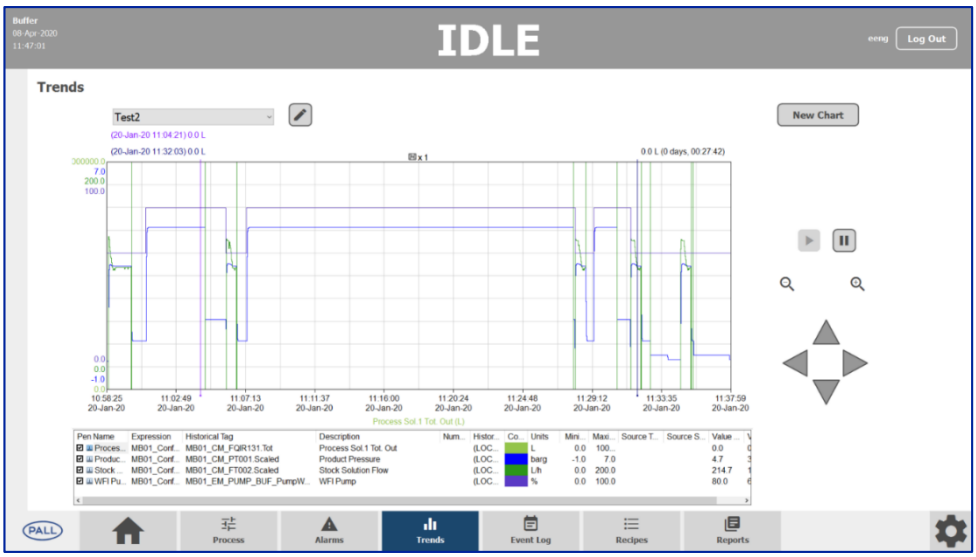

With the dropdown on the upper left side, an existing pre-set can be selected for editing or monitoring.

Selecting a new entry from the dropdown loads the trends and updates the trend curve windows automatically.

7.4 Events Log

The events screen shows a log of the audit trail entry history for the skid. A time window can be defined for the query.

Figure 17
Events screen

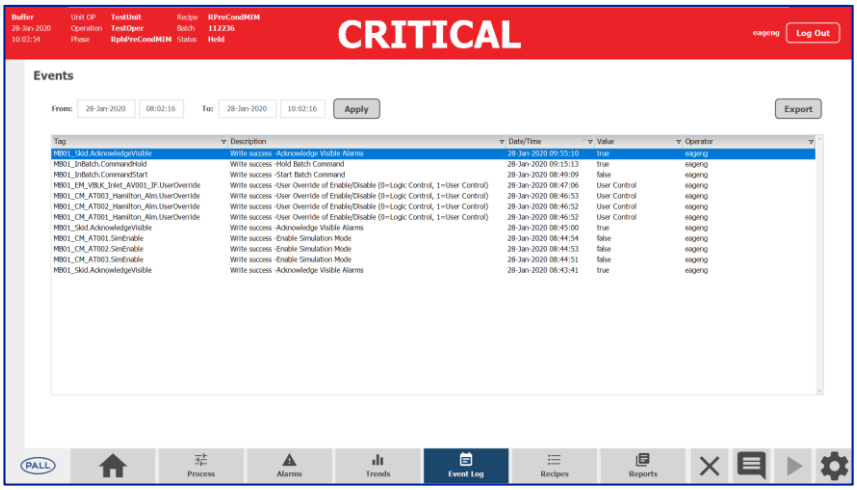

7.5 Loading a Recipe

The recipes screen is accessed from the 'Recipe' button in the screen footer. The recipes screen enables the operator to control and monitor a batch.

Figure 18
Recipes screen

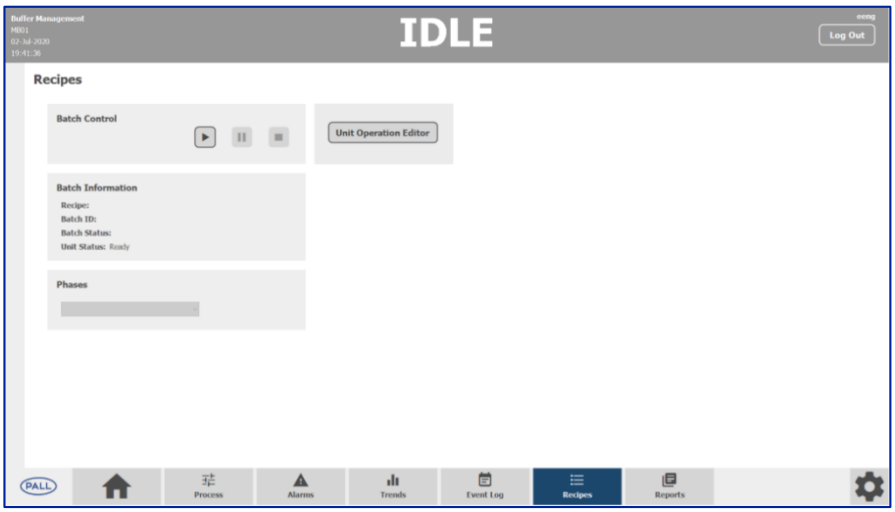

To load a recipe, the 'play' button is pressed and a pop up for the recipe definition will be opened.

Figure 19
Recipe selection screen

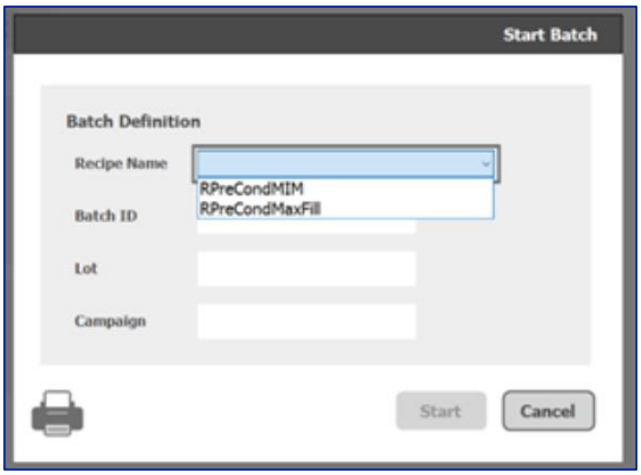

A predefined recipe can be selected (list of recipes is defined in the global parameters). The batch ID, lot and campaign must be entered, and the selected recipe can be started by pressing the 'Start' button. (The recipe list is defined in the global parameters.)

For recipe creation, refer to the recipe management manual.

7.6 Reports Screen

The reports screen is accessed from the "Reports" button in the screen footer and shows the last batch reports of the system. It is possible to select between the detailed and the summary report.

Figure 20
Reports screen

8 Specifications

8.1 Hardware

8.1.1 Buffer Management Skid

Table 13

Skid specifications

Part Number	Weight (kg)	Dimensions (cm) W x D x H
ACBMSEUPLC/ ACBMSWHPLC/ ACBMSEUIO or ACBMSWHIO	751	112 x 112 x 199
Materials of construction		
Material of construction	Stainless steel 1.4301 (304L)	
Surface finish	Brush #4 polished: Ra ≤ 1.4	
Utilities		
Voltage	230/240 V AC, 1 Phase	
Frequency	50/60 Hz	
Maximum current	16/10 A	
Plug type	Free cable, to be defined by customer for ideal plug	
Plug type (recommended)	EU: 16 A 230 V 3-Pole CEE Industrial Plug, IP54 US: NEMA 6-15 plug, 15 A, 208 V	
Gas supply	Minimum 6 bar	
Water supply	WFI, maximum 2 bar pressure	
Control System		
Stand-alone operation	Yes, with PLC version	
Integration into other systems	Yes, with I/O version	
Remote monitoring	Yes, with OPC UA	
Control architecture	Hybrid DCS	
Communication protocol	EtherNet/IP or Profinet OPC UA	
PLC software platform	EU: Siemens TIA Version 15.1 US: Rockwell Automation Studio5000 Logix Designer Version 32	
HMI software platform	Aveva© Wonderware® System Platform 2017 with InTouch HMI and Historian with Microsoft SQL server	
Recipe and batch management software	Aveva Batch Management 2017 (version 12)	
Reporting software platform	ODS Dream reports with Microsoft SQL Server version 4.82	
Automation design	Developed and tested in accordance with GAMP®5 guidelines	
Human machine interface	Thin Client: Siemens© SIMATIC ITC2200 V3 22”	
Audit trail storage and transfer	Yes, from Wonderware System Platform Historian	
Electronic batch records	Yes (pdf)	
Data export	Network or USB (local mode)	
Gas		
Gas connection	G1/4 thread with a Festo pressure hose coupling	
Gas connection (recommended)	Air in - push fit 6 mm tube OD	
Gas type	Clean, dry and oil free compressed air	
Pumps		
Type	QF150 SU-EZ: Concentrate pump	

	QF1200 SU-EZ: WFI pump
Quantity and connection	2 integrated variable speed Quattroflow pumps
	QF150 SU-EZ pump: ⅜ in.
Tubing	QF1200 SU-EZ pump: ½ in.
	QF150 SU-EZ pump: 3000 rpm
Maximum rated pump speed	QF1200 SU-EZ pump: 2400 rpm
	QF150 SU-EZ pump: 1 – 180 LPH
Flow rate	QF1200 SU-EZ pump: 20 – 1200 LPH
pH Sensor	
	Hamilton
Brand and type	SU OneFerm Arc 120 mm
Measuring range	pH 3 to 10
Measuring accuracy	± 0.15 pH with provided calibration values
Sensitivity	57 to 60 mV / pH at 25 °C (97% - 101%)
Conductivity Sensor	
	Hamilton
Brand and type	Conducell 4USF Arc 120 mm
Measuring range	1 µS/cm to 300 mS/cm
	1 µS/cm to 100 mS/cm: ± 3%
Sensitivity	100 to 300 mS/cm: ± 5%

Flow Sensor	
Accuracy	± 1%
Range	0 – 20 L/min
Pressure Sensor	
Brand	Labom©
Maximum range	0 – 6 bar (0 – 87 psi)
Operating temperature (ambient)	-20 to 85 °C (ambient)
Accuracy	≤ 0.2%
Regulatory Compliance	
EU	CE
US	Compatible with NRTL standard(s)
Applicable directives	Machinery directive 2006/42/EC
	Low voltage directive 2014/35/EU
	Electromagnetic compatibility directive 2014/30/EU
	Restriction of hazardous substances directive 2015/863/EU
Applicable standards	Electrical safety of laboratory equipment IEC / EN 61010-1
	Electrical safety of laboratory equipment, national deviations USA and Canada, designed according to UL / CSA 61010-1
	Electrical safety of machines IEC / EN 60204-1
	Machine safety ISO 12100:2010
	EMC EN 61326-1:2013 EN 61000-3-2:2014 EN 61000-3-3:2013
	FCC testing acc. CRF 47, Part 15, Subpart B, Section 15.107, 15.109
IP rating	IP54

8.1.2 Buffer Stock Solution / Process Solution Workstations

Table 14

Workstation specifications

Part Number	Weight (kg)	Dimensions (cm) W x D x H
ACSBMSWS	171	100 x 130 x 200
Materials of Construction and Finish		
Material of construction	Stainless steel 1.4301 (304L)	
Surface finish	Brush #4 polished: Ra ≤ 1.4	
Welds	According to ISO 15607 and ISO 5817 level D	
Weld finish	Ground smooth and polished	
Shelving material	Plastic	
Castor wheel material	Plastic	
Wheel bracket material	304L stainless steel	
IP rating	IP54	
Utilities		
Voltage	24 V	
Plug type	Harting connectors and cables included with system	
Regulatory Compliance		
EU	CE	
US	Ready for NRTL certification	
	Machinery directive 2006/42/EC	
	Low voltage directive 2014/35/EU	
	Electromagnetic compatibility directive 2014/30/EU	
Applicable directives	Restriction of hazardous substances directive 2015/863/EU	
	Electrical safety of laboratory equipment IEC/ EN 61010-1	
	Electrical safety of laboratory equipment, national deviations USA and Canada, designed according to UL /CSA 61010-1	
	Electrical safety of machines IEC/ EN 60204-1	
	Machine safety ISO 12100:2010	
	EMC EN 61326-1:2013 EN 61000-3-2:2014 EN 61000-3-3:2013	
Applicable standards	FCC testing acc. CRF 47, Part 15, Subpart B, Section 15.107, 15.109	

8.1.3 Filter Trolley

Table 15

Filter trolley specifications

Part Number	Weight (kg)	Dimensions (cm) W x D x H
ACBMSFT	90	40 x 120 x 130
Materials of Construction and Finish		
Material of construction	Stainless steel 1.4301 (304L)	
Surface finish	Brush #4 polished: Ra ≤ 1.4	
Welds	According to ISO 15607 and ISO 5817 level D	
Weld finish	Ground smooth and polished	
Castor wheel material	Plastic	
Wheel bracket material	304L stainless steel	
Utilities and Specifications		
Voltage	24 V	
Plug type	Harting connectors and cables included with system	
Regulatory Compliance		
EU	CE	
US	Compatible with NRTL standard(s)	
Applicable directives	Machinery directive 2006/42/EC	
	Low voltage directive 2014/35/EU	
	Electromagnetic compatibility directive 2014/30/EU	
	Restriction of hazardous substances directive 2015/863/EU	
Applicable standards	Electrical safety of laboratory equipment IEC / EN 61010-1	
	Electrical safety of laboratory equipment, national deviations USA and Canada, designed according to UL / CSA 61010-1	
	Electrical safety of machines IEC/ EN 60204-1	
	Machine safety ISO 12100:2010	
	EMC EN 61326-1:2013 EN 61000-3-2:2014 EN 61000-3-3:2013	
	FCC testing acc. CRF 47, Part 15, Subpart B, Section 15.107, 15.109	
IP rating	IP54	

8.2 Operating Specifications

Table 16

Operational specifications

Environmental Use	Temperature	Humidity
Indoor	5 – 30 °C	RH 10 – 70% (non-condensing)

8.3 Process Specifications

Table 17

Buffer management process specifications

Process Specifications	
Minimum recommended dilution factor	5x dilution
Maximum recommended dilution factor	20x dilution
Operating liquid temperature	4 °C – 40 °C
Operating pressure	The SU container must be capable of handling the maximum allowed pressure of 0.1 bar (1.45 psi). In addition, the SU manifold should be able to handle pressure of up to 2 bar (29.01 psi)
Residual volume	After draining without manipulation of the SUS, the residual volume in the manifold should be: <20 mL per disconnection
Operating life for SU manifold	24 hours
Environment Specifications	
Storage (hardware)	Store at a temperature range between 5 °C – 30 °C and a relative humidity of 10-70%, non-condensing Do not expose to direct sunlight, other radiation, or direct weather conditions.
Storage (single-use system)	Store in original packaging in dry conditions at a temperature range between 0 °C – 30 °C For more information, see document USD 2421b (Assembly and Installation Procedures Pall Allegro Single-use Systems).
Gamma Irradiation	
Gamma irradiation	Minimum 25 - 50 kGy

**These specifications are only valid for Pall standard products.*

9 Maintenance and Service

To schedule a service or request a quote for repair, please visit the web address below or contact your Pall representative.

https://www.pall.com/en/instrument-service-support.html

Email: service@pall.com

It is recommended that the Allegro Connect buffer management system is serviced on an annual basis.

If any damage is found or any part of the product is not functioning normally then do not continue using the product and contact Pall for help and advice.

If any problems occur with the equipment, no attempt should be made to perform any service as it may void any warranty. Only Pall approved parts may be used. In any correspondence with Pall, the model, manufacturing part and serial numbers of the hardware should be recorded for reference.

10 Technical Assistance

10.1 Troubleshooting

For additional alarm troubleshoot information, see the associated Alarm Troubleshooting Guide.

10.1.1 Non-Persistent Failures

Each potential below mentioned warning is based on wrongly connected sensors, cables or misuse of the equipment. We can advise to read the relevant section again in the manual.

Once the issue is resolved and the alarm accepted, there should be no recurrence.

Table 18

Non-persistent failure troubleshooting

Warning	Possible Causes	How to Resolve
pH sensor data fault alarm	• pH sensor not connected • pH sensor defective	• Connect pH sensor or disable alarm
Conductivity sensor data fault alarm	• Conductivity sensor not connected • Conductivity sensor defective	• Connect the conductivity sensor or disable alarm
Conductivity and/or pH value drifts from target	• Wrong dilution factor used to control conductivity • Incorrect buffer concentrate preparation • Incorrect/obstructed flow path connections • Incorrect set-points or tolerances	• If process buffer can't stabilize abort, repeat or close the batch run. • If dilution factors, set points or tolerances are incorrect, then abort the batch as edits are required in the set-up phase
Air-line pressure alarm	• Low or high air pressure	• Check valves and air-line pressure

Level sensor data fault alarm	• Level sensor not connected correctly • Ensure biocontainer on workstation fitted correctly • Overfilling of biocontainers on workstation	• Connect the level sensor or disable level sensor functionality
Pressure high alarm	• Incorrect/obstructed flow path connections • Valves locked • Pressure alarm not set correctly	• Remove any blockages • Open filter vent valves
Pressure sensor data fault alarm	• Labom pressure sensor not connected	• Ensure pressure sensor is connected to measurement point
Interlock triggered on IO UCI	• Valve block is open • Critical pressure alarm • E-stop button pressed on skid • Activating a pump when the flow path is not open when using in manual mode	• Reset E-stop button • Open valves • Accept alarms • Make sure the manifold is unblocked • Decrease liquid filling flow rate
The temperature indicator is not giving the correct value in calibration	• Incorrect temperature reading during calibration of probes • Probe not fitted correctly • Probe is damaged	• Probe requires changing

10.1.2 Persistent Failures

If any of these below failures reappears on frequent base, please contact Pall service. When the failure only happening sometimes, we advise you to acknowledge the warning/failure and push the reset button.

Table 19

Persistent failure troubleshooting

Fault	Possible Cause
Flow sensor fault	Flow sensor wiring fault giving false measurements
Air line fault	Replace pneumatic tubing and ensure line pressure is suitably high
Valves fault	Wire fault or pressure fault resulting in actuation error
Pump 1 fault	Wire fault in the concentrate solution pump motor
Pump 2 fault	Wire fault in the water pump motor
Level sensor fault	Wiring fault
Local HMI communication timeout	Wiring fault
Pressure high alarm	Too high flow rate Flow rate should be decreased

10.1.3 Safety Failures

In any of below cases, please stop the equipment and contact Pall service immediately. The equipment may not be used for time being.

Table 20

Safety failure troubleshooting

Fault	Possible Cause	How to Resolve
Interlock triggered on skid	• Something wrong with HMI • Pump motor broken • Valves not actuating • Uncleared alarms • Interlock button is pressed in	Re set interlock button and contact Pall
Valve actuation failure	• No pressure applied to valves • Connection to valves fault • Check air pressure	Contact Pall

10.2 Technical Support

For technical support, please contact:

- Your local Pall representative
- Visit www.pall.com

Or contact Pall regional headquarters section 1.

11 Cleaning of the Equipment

It is recommended that before and after every use, all exposed surfaces of the Allegro Connect buffer management system hardware are cleaned. Do not use abrasive cleaning agents as any non-specified cleaning method can result in the nullification of the product warranty.

A soft, damp cloth moistened with the following recommended cleaning solutions should be used for wiping exposed surfaces of the hardware:

- WFI
- 5% (active chlorine) Sodium hypochlorite
- 70% Ethanol
- 70% IPA
- 200 µg/g Benzalkonium chloride
- 2% Sodium hydroxide

Minimum contact time for any cleaning agent used above should be for at least 10 minutes.

12 Disposal

12.1 Single-Use System

The manifolds and containers used contain plastic parts to provide connectivity between workstations and skid, as well as providing rigidity to hold their shape. Any used consumables should be disposed of in accordance with local regulations.

12.2 Hardware

The presence of this label on a product means that the product contains electrical or electronic materials and therefore should not be disposed of as unsorted waste but instead treated separately. The presence of these materials may, if not disposed of properly, have potential adverse effects on the environment and human health. Within the European Union users are urged to recycle such products when being replaced with a newer version or when they have outlived their lifetime. However, as the legislation and facilities vary throughout the member states, please contact your local Pall sales office or distributor to discuss the available options for correctly disposing of this product.

To dispose of the Allegro, Connect buffer management skid, workstation and filter trolley, the relevant legal regulations must be observed. Within the European Community, the disposal of electrical devices is regulated by national regulations based on EU directive 2012/19/EU pertaining to waste electrical and electronic equipment (WEEE). According to these regulations, any device supplied after August 13, 2005, in the business-to-business sphere (to which this product is assigned), may no longer be disposed of in municipal or domestic waste. To document this, they have been marked with the following symbol:

Figure 21

Waste electrical and electronic equipment symbol

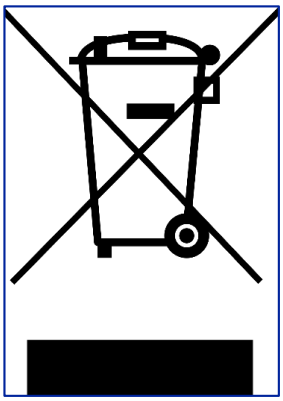

As disposal regulations may differ within the EU, please visit:

https://www.pall.co.uk/uk/en/about-pall/corporate-sustainability/weee-compliance.html

Please refer to the Modular Disassembly instructions (v1.0) for further information

13 Warranty

Pall warrants that the Allegro Connect buffer management system manufactured by Pall, when properly stored and installed, and operated at ratings, specifications and design conditions, will be free from defect in material and workmanship during the warranty period. Pall liability under any warranty is limited solely to replacing or issuing credit for the Allegro systems and hardware that may become defective during the warranty period.

14 Scientific and Laboratory Services

Pall operates a technical service team to assist in the application of all filter and separation products. This service is available to you and we welcome your questions. Your requests allow us an opportunity to help. Pall has a full network of technical representatives available throughout the world.

15 Appendix

15.1 Hamilton Probe Calibration on Buffer Management System

The calibration of the two Hamilton sensors proceeds by firstly connecting the sensor to the system. These sensors are connected via a VP8 connection. The groove on the sensor should be aligned with the internal ridge on the buffer management lead to successfully connect. Some resistance may be felt during connection; however, the sensor should be screwed in until a complete connected is achieved.

- For the pH sensor, this is a connection between the pH sensor and the arc head.
- For the conductivity sensor, this is a connection between the conductivity sensor and the lead.

Please see Figure 21 for visuals of the sensor groove and examples of a complete / incomplete connection.

Figure 22

Sensor connection aids. The red box indicates the area of interest.

For the SU pH sensor, once the connection is made, calibration details can be inputted onto the Allegro Connect buffer management system HMI, by firstly selecting 'SU' and entering the serial number. The details written on the associated blue tag should then be inputted to verify calibration. For a Re-Usable (RU) pH sensor, RU should be selected on the HMI prompt and then calibration should follow using pH 4.01 and 7.01 as per the end user standard of practice.

For RU conductivity sensor calibration:

1. Remove from the autoclave bag from steam sterilization (this can also be used unsterilized)
2. Connect to the system as per the instructions above.
3. Screw into the calibration well probe insert, such that approximately 1.5 cm of the probe is protruding from the end, this is the equivalent of approximately 2.5 grooves on the black sensor screw.
4. Place into a calibration well, clamped via a tri-clover (TC) clamp and filled with the desired standard up to the inner groove, see Figure 22 for the calibration well set-up.
5. Calibrate by firstly inputting the serial number, followed by the calibration standard measurement at the current temperature. For validation, all sensors have had a temperature compensation coefficient inputted to normalize measurements to 25 °C, which is 2%/ °C.
6. When the temperature compensation is on, the conductivity at 25 °C should be entered. Calibration can be checked by clicking onto the process tab and checking the real-time conductivity measurement for the relevant sensor.
7. The sensor can then be removed and placed into the SU manifold in the relevant position. To ensure suitable sensor submersion the sensor should be screwed in until approximately 2.5 grooves on the black sensor screw are showing, this may require a 15 mm spanner.

This should be completed for both the process and waste conductivity probes

Figure 23

Calibration well set-up, red box indicates the 'probe insert', orange box indicates the 'TC clamp', yellow box indicates the 'calibration well'.

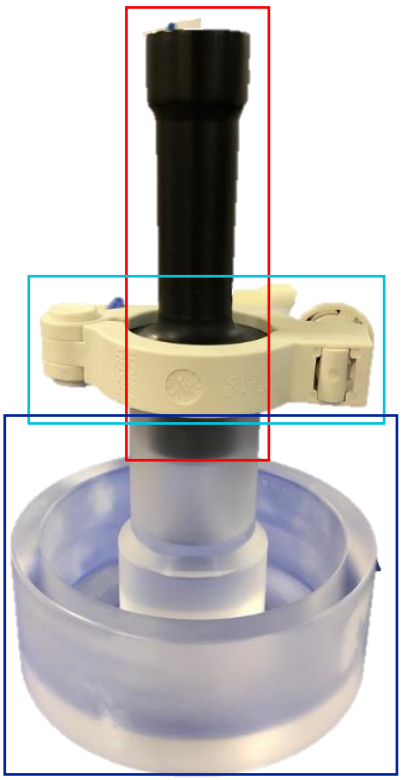

15.2 pH Probe Maintenance (Using Single-Use Probe)

The single-use pH probes are integrated and delivered within the manifold, and will arrive dry post gamma irradiation. Calibration is managed through set-up of the system using the details from the tag on the probe, and disposal of the probe should be performed with the manifold during uninstallation.

15.3 pH Probe Maintenance (If Using a Reusable pH Probe)

15.3.1 Electrode Calibration

Since glass pH probes measure H+ concentration relative to their reference half-cells, they must be calibrated periodically to ensure accurate, repeatable measurements. pH calibration buffers include solutions standardized against NIST-certified pH references for calibrating meters with resolution up to 0.001 pH.

Although calibration against one pH reference buffer (one-point calibration) typically ensures accurate pH measurement, frequent two-point or even three-point calibrations ensure the most reliable results. Make sure your pH system includes calibration buffers for a range of pH values that cover the application.

15.3.2 Conditioning

pH probes are shipped with the electrodes moist. Prior to using your probes for the first time, follow these three steps to condition your electrode:

1. Remove the protective rubber cap from the bottom of the probe and rinse the electrode with deionized water.
2. Place the probe in a beaker/sachet containing one of the liquids listed below. Soak for 20 minutes.

- 4 M potassium chloride (KCl)
- pH 4.01 buffer standard
- pH 7.01 buffer standard

Long term exposure to pure water could damage the probe so never condition a pH probe in distilled / deionized water.

3. After conditioning the probe for 20 minutes, rinse the electrode with distilled or deionized water.

15.3.3 Handling

Probes should be rinsed between samples with distilled or deionized water. Never wipe a probe. Wiping can cause erroneous readings due to static charges. Blot the end of the probe with lint-free paper to remove excess water.

15.3.4 Storage

Always keep your pH probe moist. We recommend that you store your probe in a solution of 4 M KCl. If 4 M KCl is not available, use a pH 4 or 7 buffer solution. DO NOT store the probe in distilled or deionized water, this will cause ions to leach out of the glass bulb and render the probe useless.

15.3.5 Protective Rubber Cap

Most probes are shipped with a protective rubber cap over the glass bulb to help prevent cracking or scratching. Remove the rubber cap before using your probe. Keep your electrode in long-term storage with the cap on. Fill the cap with enough 4 M KCl solution to cover the glass bulb and replenish as needed to keep the bulb moist.

15.3.6 System Configuration

The Allegro Connect buffer management system arrives configured with Hamilton SU and RU Arc pH probes If alternative probes are required to be used, the Modbus address code would need changing.

15.4 Conductivity Probe Maintenance

15.4.1 Sensor Calibration

Calibrate using a standard solution in the range of the samples you are testing. Place the probe in standard solution, condition, rinse probe and put probe into standard solution to calibrate, and then adjust the cell constant until the specified value is displayed. Recalibrate when you change ranges, or if readings seem to be incorrect.

Only use standards which are programmed to be recognized by the probe. Appropriate standards are shown below. For further information please see the Hamilton website:

- 84 µS/cm
- 1413 µS/cm
- 12.88 mS/cm
- 50 mS/cm
- 118 mS/cm

We recommend using 84 µS/cm for the waste probe on the Allegro Connect buffer management system and optimizing the in-line probe in accordance with the solutions expected to be run on the process.

15.4.2 Handling

Probes should be rinsed between use with different samples using distilled or deionized water. Blot the end of the probe with lint-free paper to remove excess water.

15.4.3 Protecting the Probe Pre- and Post-Use

Most probes are shipped with a protective rubber cap over the tip of the probe to prevent damage or scratching. Remove the rubber cap before using your probe and replace post use after cleaning.

15.4.4 Autoclaving and Steam Sterilizing Conductivity Probes

Hamilton probes are autoclavable up to a maximum temperature of 130 °C and steam sterilizable up to 140 °C.

Corporate Headquarters
Port Washington, NY, USA
+1-800-717-7255 toll free (USA)
+1-516-484-5400 phone

European Headquarters
Fribourg, Switzerland
+41 (0)26 350 53 00 phone

Asia-Pacific Headquarters
Singapore
+65 6389 6500 phone

Visit us on the Web at www.pall.com/industry
Contact us at www.pall.com/contact

Pall Corporation has offices and plants throughout the world. To locate the Pall office or distributor nearest you, visit www.pall.com/contact.

The information provided in this literature was reviewed for accuracy at the time of publication. Product data may be subject to change without notice. For current information consult your local Pall distributor or contact Pall directly.

IF APPLICABLE Please contact Pall Corporation to verify that the product conforms to your national legislation and/or regional regulatory requirements for water and food contact use.

USD 3416 June 2021